Programmable timer with LVD

Installation Instructions
Operating Instructions

Espar Heater Systems

Espar Products, Inc.

(800) 387-4800

(905) 670-0960

www.espar.com

Programmable timer with LVD

25 2800 70 1010

25 2800 70 2020 - Dual Input

25 2800 70 3030 - Dual Output (Button & circuit board separate)

04.2011 Subject to Change

Web edition

Programmable timer with LVD

25.2800.70.1010

operates as simple On/Off switch with internal count down timer and LVD

Wire Colors:

Output	-	Yellow
Ground	-	Brown
Input Voltage	-	Red

Programmable timer with LVD, Dual Output

25.2800.70.3030

operates as 25 2800 70 1010 with an added output for preheating element, if indicated by temp. sensor.

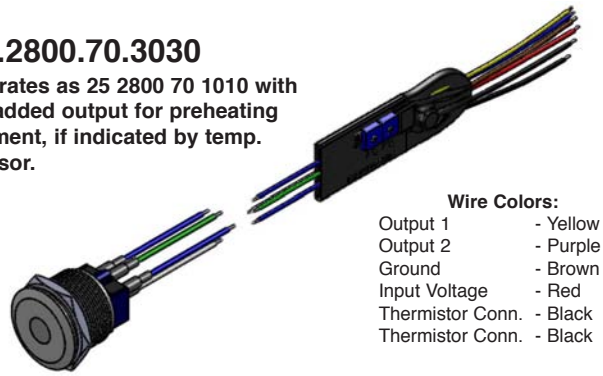

Wire Colors:

Output 1	-	Yellow
Output 2	-	Purple
Ground	-	Brown
Input Voltage	-	Red
Thermistor Conn.	-	Black
Thermistor Conn.	-	Black

General Specification:

1) Input – 12-24V DC
2) Switch – Lighted, Momentary, panel-mounted with robust wash-down gasket seal.
3) Output #1 – 4A Max
4) Screwdriver adjustable timer.
5) Screwdriver adjustable voltage cut-off

Initialization

1) Reads battery voltage – if voltage greater than 16V – sets battery voltage cut-off settings for 24V – if voltage is less than 16V – sets battery voltage cut-off settings for 12V.

2) Reads battery threshold potentiometer and sets voltage cut-off settings based on previous determination of 12 or 24 V system. Cut-offs are 10.5 – 12.5V in .25V increment and 21 - 25V in .5V increments.

3) Reads timeout potentiometer and sets timeout threshold value – range is set by dip-switch position 1 (Left Switch) – Highest setting is infinite timeout.

4) Dip Position 1 (left switch) sets Time Mode
   (See below for setting procedure)

5) Voltage and Timeout settings are displayed as a series of flashes of the LED.

The setting of the Timer, Temperature and LVD (low voltage disconnect) most be completed prior to applying power to the switch. To change the settings, power must be removed from switch, and then the adjustments can be made.

Programmable timer with LVD, Dual Input

25.2800.70.2020

operates as 25 2800 70 1010 with added inputs for timer and temp. sensor

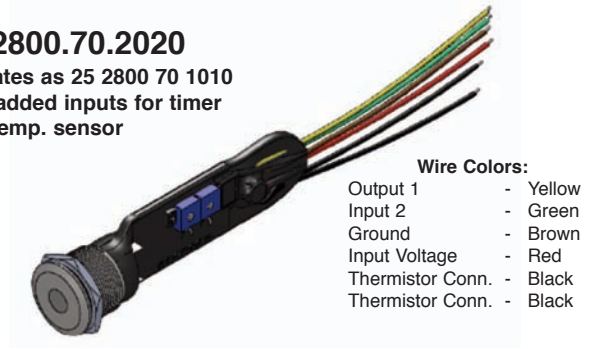

Wire Colors:

Output 1	-	Yellow
Input 2	-	Green
Ground	-	Brown
Input Voltage	-	Red
Thermistor Conn.	-	Black
Thermistor Conn.	-	Black

Setting the Timer (with power disconnected)

Setting the timer to minute or hours is determined by the position of the dip switch 1. Up position is hours and the down position is for minutes. The timer can be set for 10 minutes to 120 minutes or 2 hours to 24 hours and can also be set for continuous running. Adjustments are made by turning the “TIME” dial with a small screwdriver. Depending on the dip switch position, turning the dial clockwise will increase the time by 10 minute increments to a 120 minute maximum or by 2 hours increments to a 24 hour maximum. When the dial is turned completely clockwise this sets the switch to act as an on/off switch with no timer function.

Setting the LVD (with power disconnected)

The LVD can be set in .25 volt increments.
Turning the “BAT” dial completely counter clockwise will set the LVD to its lowest value. (10.5v for 12 volt system and 21v for 24 volt system)
Turning the Dial clockwise will increase the LVD values by .25 volt increments for 12 volt systems and .5 volts for 24 volt systems to maximum value. (12.5 v for 12 volt system and 25 for 24 volt system)

Hour Meter

The hour meter will count the hours after the first hour of operation.
To read the run time, push and hold the button for at least 6 seconds. When the button is released the LED will give a series of slow and fast flashes. The first set of slow flashes will be the first number of the hours. Then a burst of fast flashes will break the next number. The next set of slow flashes will be the second number of total run time. The same will follow for the 3rd and 4th numbers.
To clear the hour meter press and hold the button for 2 minutes and it will reset the hour meter back to 0.

Setting Temperature

Dual Input	**25 2800 70 2020**	**Preset 60°F**
Dual Output	**25 2800 70 3030**	**Preset 32°F**

1) A temperature setting can be programmed into the switch. To program the unit, remove power from switch, set the Dip Switch position 2 (Right switch) to ON and power the switch up.

2) Immediately push the switch button repeatedly to the desired temperature you wish the heater not to be activated. The temperature setting begins at zero and is incremented by one degree F with each closure of the switch. You should see the switch light up every time you push the switch down.

3) A 5 second pause with no switch button closure completes the programming mode. To verify the correct desired temperature setting, a two digit number will be flashed out as a series of pulses.

4) To store the set temperature in memory remove power from the switch and return the dip switch back to position 1.

5) Temperature threshold setting can be changed by repeating steps 1 – 4

Example of Flash Sequence at 45F

xxxxxxx - (x x x x) - xxxxx - (x x x x x) - xxxxxxxx
4 5

General Operation:

25 2800 70 1010
25 2800 70 2020 Dual input

1) Ensure Dip Switch Position 2 (Right Switch) is on OFF Position , which is Run Mode.

2) Push of the momentary switch turns the heater on and off. Overrides all other inputs.

3) Input from green wire (External Timer Module) turns on heater when temperature is below set threshold. (applies only to 25.2800.70.2020.0Z)

4) If heater is on from external timer input signal, a push of the momentary switch will turn the heater off.

5) Monitors battery voltage – if battery voltage drops below threshold after initial 8 minutes - heater shuts off.

6) When timeout value is reached – heater turns Off.

25 2800 70 3030 Dual Output

1) Ensure Dip Switch Position 2 (Right Switch) is on OFF Position, which is Run Mode

2) Push of the momentary switch turns the heater on and off Heater starts with Output#1 switching ON if temperature input is below threshold

3) After temperature threshold is exceeded by 15 degrees, Output #1 switches OFF - if temp starts above threshold + 15 degrees, Output 1 never starts
4) Monitor timeout value - if time exceeds 6 Minutes - Output #2 Turns ON

5) If temperature value drops below temperature threshold - Output #1 turns back On while heater sequence is still ongoing

6) Monitors battery voltage - if battery voltage drops below threshold after initial 8 minutes with Output #2 On - heater shuts Off

7) When timeout value is reached - Output #1 & Output #2 turn off

Flash Code Sequence

Immediately after applying power to the switch a sequence of flashes will appear.

Hour Setting

Dip Switch 1 in the up position (example 20 hours)

xxxxxxx - (no flash) - xxxx- (x x) - xxxx - (no flash)
0 2 0

Continuous run

xxxxxxx - (no flash) - xxxx - (no flash) - xxxx - (no flash)
0 0 0

Voltage Setting (example 11.5V)

xxxxxxx - (x) - xxxx - (x) - xxxx - (x x x x x) - xxxx - (no flash) - xxxxxxx
1 1 5 0

Example of timer, switch combination (next page):

Timer Switch Combination (Example)

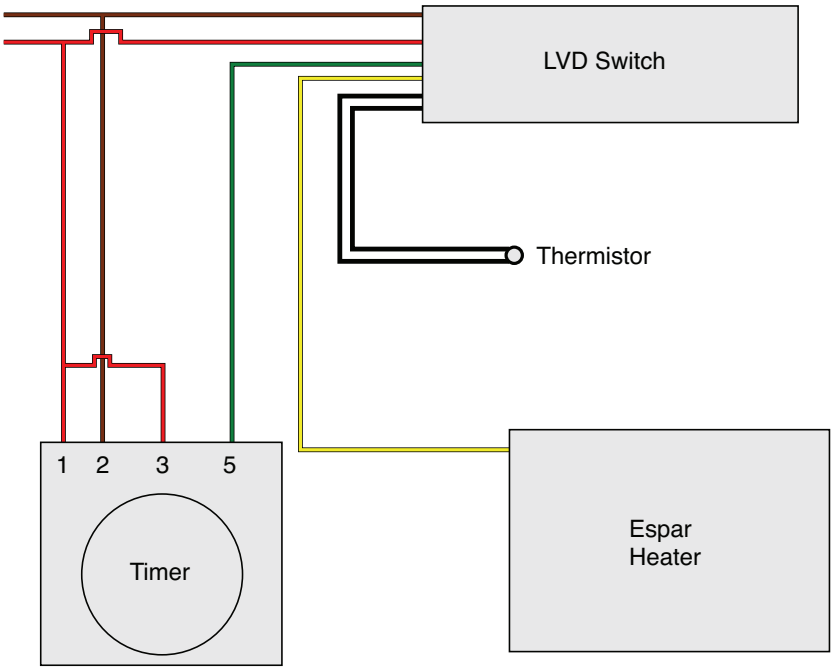

Mini Controler with LVD Switch electrical schematic

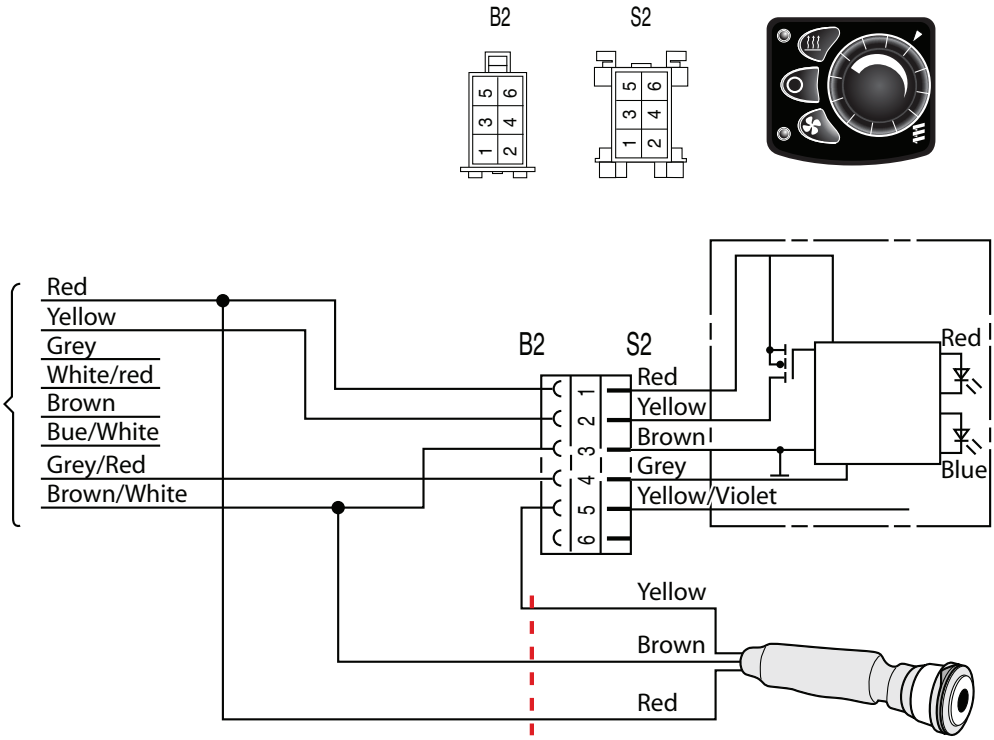

April 2011
Web edition
Subject to change

Espar Products, Inc.

(800) 387-4800

(905) 670-0960

www.espar.com

A member of the Worldwide **Eberspächer** Group of Companies