AIRTRONIC L

Troubleshooting and Repair Instructions

Eberspächer

J. Eberspächer
GmbH & Co. KG
Eberspächerstr. 24
D-73730 Esslingen

Phone (switchboard)
(0711) 939-00
Fax
(0711) 939-0500

www.eberspaecher.com

The troubleshooting and repair instructions are only applicable to the following unit versions

***AIRTRONIC* L engine-independent air heater for petrol engines**

Heater	Order No.
AIRTRONIC L – B5, 12 volt	20 1859 05 00 00

***AIRTRONIC* L engine-independent air heater for diesel engines**

Heater	Order No.
AIRTRONIC L – B5, 12 volt	25 2361 05 00 00
AIRTRONIC L – D5, 24 volt	25 2362 05 00 00

25 2361 95 16 95 04.2008 Subject to changes Printed in Germany © J. Eberspächer GmbH & Co. KG

1 Introduction

List of Contents

This list of contents gives you precise information about the contents of the Troubleshooting and Repair Instructions.

If you are looking for a term, technical term or you would like an abbreviation explained, please use the relevant index at the end of the instructions, from page 53.

Chapter	Title	Contents	Page
1	**Introduction**	• Contents	2 – 3
		• Foreword	4
		• Safety instructions for installation and repair	4
		• Accident prevention	4
		• Special text structure, presentation and picture symbols	4
		• Important information before starting work	4
2	**Function**	• Cutaway view	5
		• Functional description	6
		– Switching on	6
		– Control in heating mode	6
		– Ventilation mode	6
		– Switching off	6
		• Control and safety devices	7
		• Forced shutdown ADR / ADR99	7
		• Emergency stop (EMERGENCY OFF)	7
3	**Product information**	• Technical data *AIRTRONIC* L – petrol / diesel	8
		• Check values	9
		– Test speed for the blower	9
		– Resistance values	9
		– Switching value	9
		– Exhaust emission specification	9
		– Check “external” temperature sensor	9
		– Table of values – “external” temperature sensor	9
4	**Troubleshooting**	• What to check first in case of faults	10
		– Check	10
		– Electrical components	10
		– Measure battery voltage	10
		– Measure voltage supply (Cl 30)	10
		– Check switch-on-signal	10
		– Check control unit	10
		• Overview of the individual test equipment and control units	11
		• Locking the control box	11
		• Cancel the control box lock	11
		• Check control unit	12
		– Before the test	12
		– Check the setpoint potentiometer of the control unit	12
		• Fault diagnosis using the diagnostic unit	13, 14
		• EDiTH customer service program with ISO adapter	15
		• EDiTH customer service program with basic adapter	16
		• Fault diagnosis using the module timer	17
		• Fault diagnosis using the radio remote control TP5	18
		• EasyStart R+ radio remote control	19
		• Fault code table	20 – 24

List of Contents

Chapter	Title	Contents	Page
5	**Repair instructions**	• Repair instructions	25
		• Always observe the following safety instructions before working on the heater	25
		• Special tool AMP release tool	25
		• Assembly drawing	26
		• Parts list	27
		• Repair step 1 Dismantle / assemble glow plug	28
		• Repair step 2 Dismantle / assemble lining	28
		• Repair step 3 Dismantle / assemble control box	28
		• Repair step 4 Dismantle / assembly combination sensor (overheating / flame sensor)	29
		Check combination sensor	30
		• Repair step 5 Dismantle / assemble combustion air fan	30
		• Repair step 6 Replace the combustion chamber cover seal	32
		• Check fuel supply	33
		• Measuring the fuel quantity	33
6	**Circuit diagram**	• Parts list *AIRTRONIC* L – 12 volt / 24 volt	34
		• Parts list *AIRTRONIC* L – ADR – 12 volt / 24 volt	34
		• Circuit diagram *AIRTRONIC* L – 12 volt / 24 volt	35
		• Circuit diagram for control units	36 – 40
		• Circuit diagram *AIRTRONIC* L – ADR – 12 volt / 24 volt	41
		• Circuit diagram control units – ADR	42
		• Parts list circuit diagram control unit EasyStart R+ / R / T	43
		• Pin assignments	44
		• Circuit diagram control units – EasyStart R+	45
		• Circuit diagram control units – EasyStart R	46, 47
		• Circuit diagram control units – EasyStart T	48
		• Circuit diagram control units – EasyStart T – ADR	49
7	**Service**	• Certifications	41
		• Disposal	41
		• EC Declaration of Conformity	41
		• Representatives abroad	42, 43
8	**Index**	• Index	44
		• List of abbreviations	45

1 Introduction

Foreword

These Troubleshooting and Repair Instructions are applicable to the heaters listed on the title page, to the exclusion of all liability claims.
Depending on the version or revised status of the heater, there may be differences between it and these troubleshooting and repair instructions.
The user must check this before carrying out the repair work and, if necessary, take the differences into account.

Caution!
Safety instructions for installation and repair!

Improper installation or repair of Eberspächer heaters can cause a fire or result poisonous exhaust entering the inside of the vehicle. This can cause serious and even fatal risks.

The heater may only be installed according to the specifications in the technical documents or repaired using original spare parts by authorised and trained persons. Installation and repairs by unauthorised and untrained persons, repairs using non-original spare parts and without the technical documents required for installation and repair are dangerous and therefore are not permitted.

A repair may only be carried out in connection with the respective unit-related technical description, installation instructions, operating instructions and maintenance instructions. This document must be carefully read through before / during installation and repair and followed throughout. Particular attention is to be paid to the official regulations, the safety instructions and the general information.

Please note!

The relevant rules of sound engineering practice and any information provided by the vehicle manufacturer are to be observed during the installation and repair.
Eberspächer does not accept any liability for defects and damage, which are due to installation or repair by unauthorised and untrained persons.
Compliance with the official regulations and the safety instructions is prerequisite for liability claims. Failure to comply with the official regulations and safety instructions leads to exclusion of any liability of the heater manufacturer.

Accident prevention

General accident prevention regulations and the corresponding workshop and operating safety instructions are to be observed.

Special text structure, presentation and picture symbols

Special text formats and picture symbols are used in these instructions to emphasise different situations and subjects. Please refer to the following examples for their meanings and appropriate action.

Special text formats and presentations

- A dot (•) indicates a list, which is started by a heading.
  - If an indented dash (–) follows a „dot“, this list is a sub-section of the black dot.

Picture symbols

Danger!
This information points out a potential serious or fatal danger. Ignoring this information can result in severe injuries.

Caution!
This information points out a dangerous situation for a person and / or the product. Ignoring this information can result in injuries to people and / or damage to machinery.

Important information before starting work

Initial commissioning of the heater or functional test after a repair

- After installing the heater, the whole fuel supply system must be carefully vented: please refer to and follow the vehicle manufacturer’s instructions.
- During the heater trial run, all fuel connections must be checked for leaks and secure, tight fit.
- If faults occur while the heater is running, use a diagnostic unit to determine and correct the cause of the fault

2 Function

Cutaway view

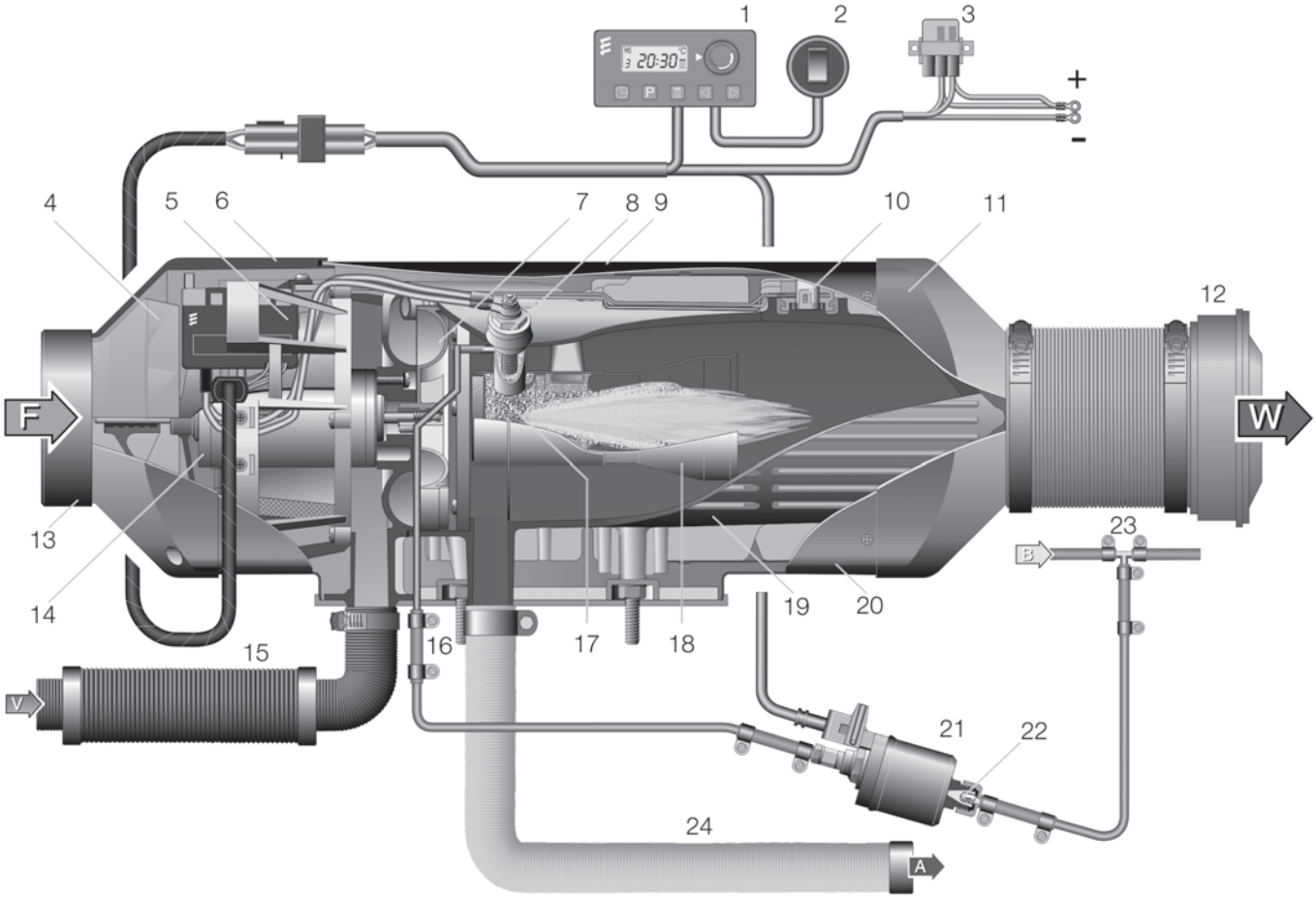

1	Module timer
2	Changeover switch „heat / ventilate“
3	Fuse bracket – Main fuse 25 A – Fuse, „actuation“ 15 A
4	Heater impeller
5	Control box
6	Intake hood
7	Combustion air fan
8	Glow plug
9	Jacket shell, top
10	Combination sensor (overheating and flame sensor)
11	Outlet hood
12	Outflow
13	Safety grille
14	Electrical motor
15	Combustion air intake silencer
16	Fuel connection
17	Combustion chamber
18	Flame pipe
19	Heat exchanger
20	Jacket shell, bottom
21	Metering pump
22	Pot-type strainer
23	T-piece
24	Exhaust pipe

F	=	Fresh air
W	=	Hot air
V	=	Combustion air
A	=	Exhaust
B	=	Fuel

2 Function

Description of functions

Switching on / starting the heater
When the heater is switched on, the control lamp in the control unit lights up.
The fan starts up in the fan stage "LOW". The glow plug starts with a 3 second delay. After approx. 45 seconds the fuel supply starts and the fuel / air mixture in the combustion chamber ignites.
The fan switches from fan stage "LOW" to fan stage "MEDIUM". The glow plug is switched off after 165 seconds, when a stable flame has formed.
The fan switches from fan stage "MEDIUM" to fan stage "HIGH".
The heater is run at an increased heating capacity of 5.5 kW (stage "POWER") in order to quickly reach the heater's operating temperature. If the heater's operating temperature has been reached, the heating capacity is reduced to 4.8 kW (stage "HIGH"). The length of time for which the heater is run with an increased heating output depends on the ambient temperature.

Control in heating mode
If the intake or ambient temperature set at the control device (10 °C up to 30 °C) has been reached, the heater switches to the “LOW“ control level and then continues to run with a low fan motor speed.

If the heat flow at the “LOW“ control level of 1.2 kW or 2.0 kW is insufficient, the heater switches to the “MEDIUM“ control level. The fan continues to run at a low speed. In most cases the “LOW – MEDIUM – LOW“ control at a low speed will cover the heating requirements.

If the heat flow at the “MEDIUM“ control level is insufficient, the heater switches back to the “HIGH“ control level. This in turn requires the full fan motor speed.
If, in special cases, even less heat flow is required than supplied by the heater at the “LOW“ control level, the heater switches to “OFF“.

The fan then continues to run for approx. 4 – 5 minutes and, only in recirculation mode, constantly ventilates until it is restarted. The restart takes place at the “MEDIUM“ control level at a low fan motor speed.

Ventilation mode
If the heater is set to “Ventilation“ at the control element, the fan runs at maximum speed.

Switching off
When the heater is switched off, the control lamp goes out and the fuel delivery is switched off.
The fan continues to run for approx. 4 – 5 minutes to cool down.

Control and safety devices

- If the heater does not ignite within 90 seconds after the fuel starts to pump, the start is repeated. If the heater still does not ignite after another 90 seconds of pumping fuel, the heater is switched off, i.e. the fuel supply is off and the fan runs on for approx. 4 – 5 minutes. After an unacceptable number of failed start attempts, the control box is locked.*

- If the flame goes off by itself during operation, the heater is restarted. If the heater does not ignite within 90 seconds after the fuel pump has restarted, or ignites and goes off again within 15 minutes, the heater is switched off, i.e. the fuel supply is off and the fan runs on for approx. 4 – 5 minutes. This automatic switching off can be cancelled by briefly switching off and on again. Do not repeat the switching off / on routine more than twice.

- In the case of overheating, the combined sensor (flame sensor / overheating sensor) triggers, the fuel feed is interrupted and the heater switched off. Once the cause of the overheating has been eliminated, the heater can be re-started by switching off and on again. After an unacceptable number of failed start attempts, the control box is locked.*

- If the lower or upper voltage limit is reached, the heater is switched off after 20 seconds.

- The heater will not start if the glow plug or blower motor is defective or if the electric lead to the metering pump is interrupted.

- If the combined sensor (flame sensor / overheating sensor) is defect or the electric lead interrupted, the heater starts up and is then switched off again during the start phase.

- The speed of the blower motor is continuously monitored. If the blower motor does not start up or if the speed deviates by more than 10 %, the heater is switched off after 30 sec.

- When the heater is switched off, the glow plug is switched on for 40 seconds (after glowing) while the fan runs on, in order to clean off any combustion residues.

* The lock can be cancelled and the faults read off:
- using the module timer / EasyStart T
- using the radio remote control TP5 / EasyStart R+.

For other controls:
- by connecting the diagnostic unit
- using the customer service program KD2000 / EDiTH.

For operation and fault list, please refer to Page 13 – 24.

Please note!

Do not repeat the switching off / on routine more than twice.

Forced shut-down during ADR / ADR99 operation

In vehicles for the transport of dangerous goods (e. g. tankers), the heater must be switched off before the truck drives into a danger area (refinery, petrol station, etc.).
Failure to comply results in the heater automatically switching off if:
- The vehicle engine is switched off.
- An additional unit is started up (e. g. auxiliary drive for unloading pump, etc.).
- A vehicle door is opened (ADR99 regulation, only in France).

The fan then continues to run briefly, for max. 40 seconds.

Emergency stop – EMERGENCY OFF
If an emergency stop – EMERGENCY OFF – is necessary during operation, proceed as follows:
- Switch the heater off at the control unit or
- pull the fuse out or
- disconnect the heater from the battery.

3 Product information

Technical data

Heater		***AIRTRONIC* L – B5**				***AIRTRONIC* L – D5**			
Heating medium		Air				Air			
Control of the heat flow		Stage				Stage			
		Power	High	Medium	Low	Power	High	Medium	Low
Heat flow (watt)		5500	4800	2700	1200	5500	4800	2700	1500
Heater air flow rate without counterpressure (kg/h)		280	275	180	125	280	275	180	125
Heater code		10				10			
Fuel consumption (l/h)		0.75	0.65	0.37	0.27	0.66	0.58	0.34	0.19
Elect. power consumption (watt)	in operation	85	80	30	15	85	80	30	15
	while starting	< 250				< 250			
Rated voltage (volt)		12				12 / 24			
Operating range Lower voltage limit: An undervoltage protector installed in the control box switches off the heater when the voltage limit is reached.		approx. 10 volt and 20 volt respectively Undervoltage protection trigger time: 20 seconds							
Upper voltage limit: An overvoltage protector installed in the control box switches off the heater when the voltage limit is reached.		approx. 14 volt and approx. 28 volt respectively Overvoltage protection trigger time: 20 seconds							
Fuel		Petrol – standard commercial quality (DIN EN 51600 / DIN EN 228)				Diesel fuel – standard commercial quality (DIN EN 590)			
Permissible ambient temperature		Heater	Control box	Metering pump		Heater	Control box	Metering pump	
	Operation	–40 °C to +50 °C	–40 °C to +75 °C	–40 °C to +20 °C		–40 °C to +70 °C	–40 °C to +75 °C	–40 °C to +50 °C	
	Storage	–40 °C to +85 °C	–40 °C to +85 °C	–40 °C to +85 °C		–40 °C to +85 °C	–40 °C to +85 °C	–40 °C to +85 °C	
Maximum air intake temperature		+40 °C							
Interference suppression		Suppression class 5 to DIN EN 55025							
Weight		approx. 9.3 kg							
Ventilation mode		Possible							

Caution!
Safety instructions for technical data!
Failure to comply with the technical data can result in malfunctions.

Please note!
Provided no limit values are given, the technical data listed is subject to the tolerances usually applicable to heaters of ±10% for nominal voltage, ambient temperature 20 °C and reference altitude Esslingen.

Check values

Test speed for the blower

Heater 12 volt
At 11.3 volt n = 4650 – 7000 U/min

Heater 24 volt
At 23.6 volt n = 4650 – 6500 U/min

Resistance values	**12 V**	**24 V**
Glow plug (heat resistance)	ca. 0.6 Ω ± 0.04 Ω	ca. 2 Ω ± 0.2 Ω
Metering pump	9.5 Ω ± 0.50 Ω	36.0 Ω ± 1.8 Ω
Control device setpoint value potentiometer	1750 Ω ±30 Ω – 2180 Ω ±80 Ω	

Switching value
Overheating sensor 140 °C – 170 °C
measured in the "POWER" control stage
and at a distance of 300mm
downstream from the hot air outlet.

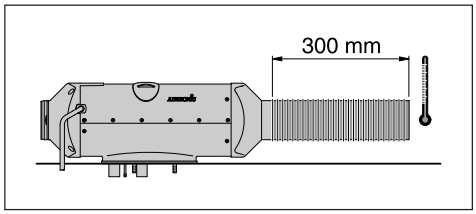

Exhaust emission specification
CO_2 in exhaust
in control stage "HIGH" 7.5 – 12.5 Vol. %
Smoke spot number < 4
according to Bacharach

Check "external" temperature sensor
(Order No.: 25 1774 89 03 00)
The "external" temperature sensor test must be carried out using a digital multimeter. If the resistance value is not the same as the curve in the diagram or the table of values, replace the temperature sensor.

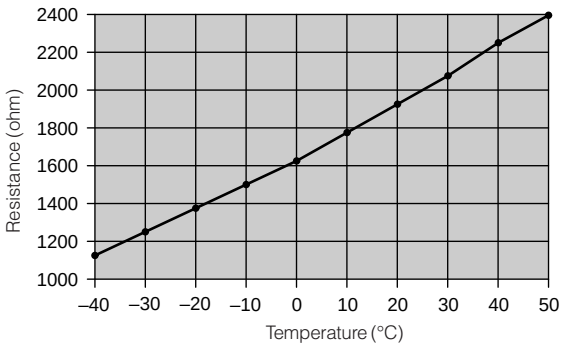

Table of values – "external" temperature sensor

Temperature °C	Resistance Ω min.	max.
0	1600	1660
5	1670	1730
10	1745	1800
15	1820	1870
20	1895	1950
25	1970	2030
30	2050	2110
35	2130	2190
40	2210	2280
45	2295	2370

4 Troubleshooting

What to check first in case of faults

- **Check**
  - Fuel in the tank?
  - Fuel pipes leaking? (visual check)
  - Summer diesel in the fuel pipe?
  - Combustion air system or exhaust system damaged or blocked?

- **Electrical components**
  - Cables, connections damaged?
  - Contacts corroded?
  - Fuses defective?
  - Incorrect wiring? (short circuits, interrupted / broken)

- **Measure battery voltage**
  - Battery voltage < 10.5 volt, the undervoltage protection of the 12 volt heater has triggered.
  - Battery voltage < 21 volt, the undervoltage protection of the 24 volt heater has triggered.

- **Measure voltage supply (Cl 30)**
  Disconnect the 16-pin connector S1 / B1 and measure the voltage applied at connector B1 between chamber 1 (cable 2.5^2 rt) and chamber 10 (cable 2.5^2 br).
  If it differs from the battery voltage, check the fuses, the supply cables, the negative connection and the positive support point on the battery for voltage drop (corrosion / interruption).

- **Check switch-on signal**
  Disconnect the 16-pin connector S1 / B1 and then switch on the heater at the control unit.
  Check whether voltage is applied in the connector B1 between chamber 4 (cable 0.5^2 ge) and chamber 10 (cable 2.5^2 br).
  If no voltage is measured, then check the supply cable (cable 0.5^2 ge), the 5 A fuse (item 2.7.1 in the circuit diagram) and the control unit.

- **Check control unit**
  Disconnect the connector at the control unit, jumper between the red 0.5^2 cable and the yellow 0.5^2 cable.
  If a voltage is measured in connector B1 between chamber 4 (cable 0.5^2 ge) and chamber 10 (cable 2.5^2 br), then replace the control unit.

4 Troubleshooting

Overview of the individual test equipment and control units

The electronic control box can store up to 5 errors, which can be read out and displayed. The following test equipment can be used to query the fault memory in the control box and if necessary to delete the control box locking:

Test equipment	Order No.:
• Testing device for the control device	22 1509 89 00 00
• Diagnostic unit	22 1529 89 00 00
additionally required: Adapter cable	22 1000 31 86 00
• EDiTH Customer service program	22 1532 89 00 00
– Basic adapter with software	22 1532 89 00 00
Also required: *AIRTRONIC extension*	22 1537 89 00 00
– ISO adapter	22 1524 89 00 00
Also required: Adapter cable	22 1000 31 86 00

If a diagnostics cable is connected, the following control units can also be used:

Control units	Order No.:
• Module timer	22 1000 30 34 00
• TP5 radio remote control	22 1000 32 01 00
• EasyStart T	22 1000 32 88 00
• EasyStart R+	22 1000 32 80 00

Please note!

If the fault memory cannot be read out, check the diagnostics cable for correct laying and possible damage.

Locking the control box

The control box is locked if the following faults occur:

- **Too many attempted starts**
  If the heater carries out several failed start attempts in succession – fault code 050 is displayed –> the control box is locked.
- **Overheating**
  If the heater overheats several times in succession – fault code 015 is displayed –> the control box is locked.

Cancel the control box lock

Cancellation of the control box lock depends on the appropriate test equipment and is described on pages 13 – 19.

4 Troubleshooting

Check control unit

Order No. for the testing device – control unit –
22 1509 89 00 00

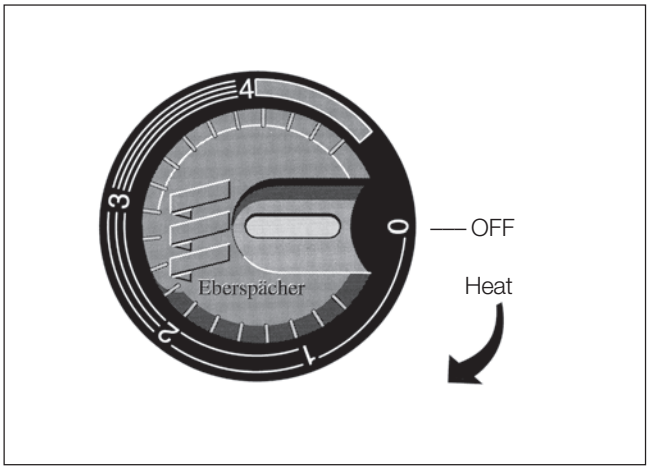

Before the test

Connect the correct operating voltage (12 or 24 volt) to the testing device, with plus at the red connector socket and minus at the blue connector socket.

- Disconnect socket from the control unit.
- Connect cable loom from testing device with the control unit.
- Set the rotary knob of the control unit to „Heat“, the corresponding red LED in the testing device must light up.
- Set control unit to „0“, then press the „LED – red“ button, the red control lamp in the control unit must light up.
- Set control unit to „Heat“, then press the „LED – green“ button, corresponding red control lamp in the testing device and the green control lamp in the control unit must light up.

Caution!
Operating voltage safety information!
Ensure you use the correct operating voltage, otherwise the connected components can be severely damaged.

Check the setpoint potentiometer of the control unit

Set the “Temperature sensor / Potentiometer“ switch in the testing device to the “Potentiometer“ setting and slowly turn the rotary knob of the control unit.
The green LED – temperature sensor / potentiometer must light up continuously.
In case of a fault, replace the control unit.

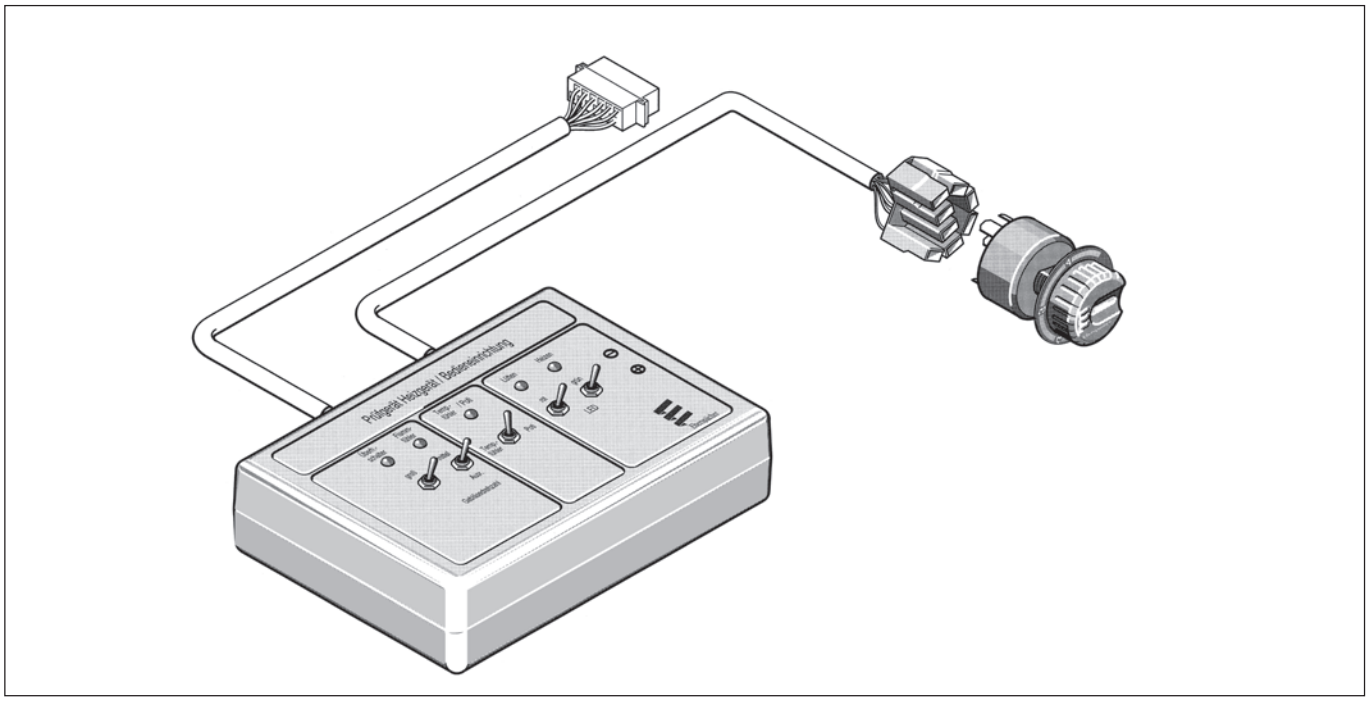

4 Troubleshooting

Fault diagnosis using the diagnostic unit

Diagnostic unit
Order No. 22 1529 89 00 00

An adapter cable is required to connect the diagnostic unit.

Adapter cable
Order No. 22 1000 31 86 00

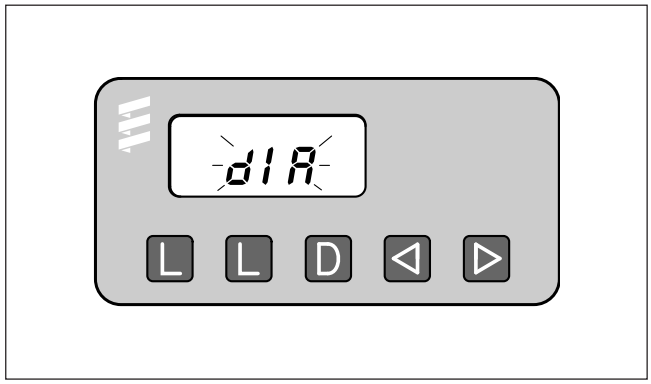

L button – Delete fault memory
L button – Delete fault memory
D button – Switch heater on / off, request diagnosis
◁ button – Reverse, fault F5 – F1, AF
▷ button – Forward, fault AF, F1 – F5

Connect diagnostic unit

- Disconnect the 16-pin connector of the heater's cable harness and connect the adapter cable.
- The connect the diagnostic unit to the adapter cable.

After the adapter cable and diagnostic unit have been connected the following appears in the display.

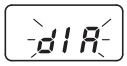

Please note!

It is very important to always install in the given order. Fault code, fault description, cause / remedial action are described on Pages 20 to 24.

Enquire fault memory

The current fault is displayed as „AF" and a 2-digit number and is always written in the memory location F1. Preceding faults are moved to the memory locations F2 – F5, if necessary the content of F5 is overwritten.

- Press button D –> the heater is switched on.
  Display is as follows:

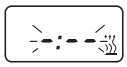

- After 8 sec. the following appears in the display:

No fault

or

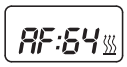

e.g. current fault / fault code 64

or

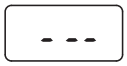

Fault diagnosis not possible

Possible causes:
– Adapter cable is not properly connected.
– Control box is defective or not diagnosable (not a universal control box).

Display of the fault memory F1 – F5 or F5 – F1

- The heater is switched on.
- Press the buttons ◁ and ▷ once or several times to display the individual fault memory positions, in ascending or descending order.
  Display is as follows:

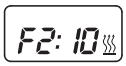

e.g. fault memory 2 / fault code 10

Only the fault memory positions with an error code assigned to them are displayed.

Delete fault memory

- Correct cause of fault.
- Press button D –> the heater is switched on.
- Press both L keys simultaneously until the following appears in the display:

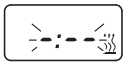

Display flashes, heater symbol does not flash

If all the fault memory positions have been deleted the most recent fault is displayed. The most recent fault is not reset to 00 until the heater is restarted.
Display is as follows:

Heater has no malfunction

If a new, most recent fault exists it is displayed.

4 Troubleshooting

Cancel the control box lock

- Delete the fault memory as described and switch off the heater using the D button.
- The control box lock is cancelled and the diagnosis closed. Display is as follows:

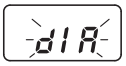

Please note!

Not only the defective component, but also a defective current circuit results in a fault being displayed.

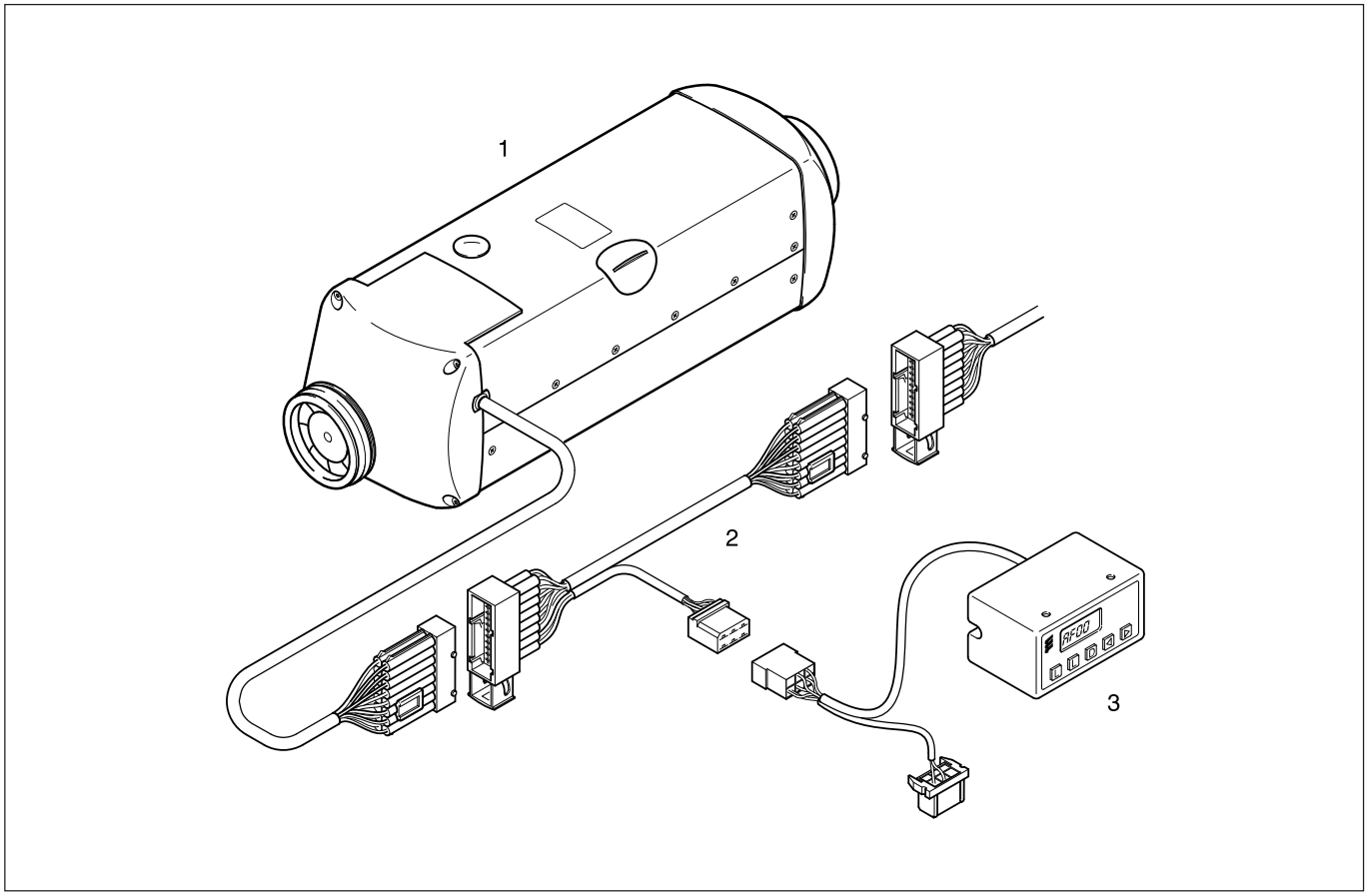

1 Heater
2 Adapter cable
3 Diagnostic unit

EDiTH customer service program with ISO adapter

Order No. 22 1524 89 00 00

An additional adapter cable is required to connect the ISO adapter (Order No.: 22 1000 31 86 00).

Please note!

- It is very important to always install in the given order.
- Not only the defective component, but also a defective current circuit results in a fault being displayed.
- Fault code, fault description, cause / remedial action are described on Pages 20 – 24.
- The scope of supply does not include the EDiTH customer service software; this must be downloaded from the service portal.

Connect ISO adapter

- Disconnect the heater's cable harness.
- Connect the adapter cable to the cable harness – as shown in the sketch.
- Connect the adapter cable to the ISO adapter.
- Connect the SUB-D connection cable with the PC and the ISO adapter.

Installing the software on your PC

- Double-click the „setup.exe" file to start the installation and following the SETUP program instructions.

Enquire / delete fault memory F1 – F5 or cancel the control box lock

- Start the software on your PC:
  - On the desktop
    –> Double click the „EDiTH" icon.
  - Select heater type.
  - Press the „GO" button.

- Delete fault memory or cancel the control box lock:
  - Press the „Delete fault memory" button
    —> the stored faults F1 – F5 are deleted and the control box is unlocked.

Quit diagnosis

- Press the „STOP" button –> fault memory enquiry is ended.

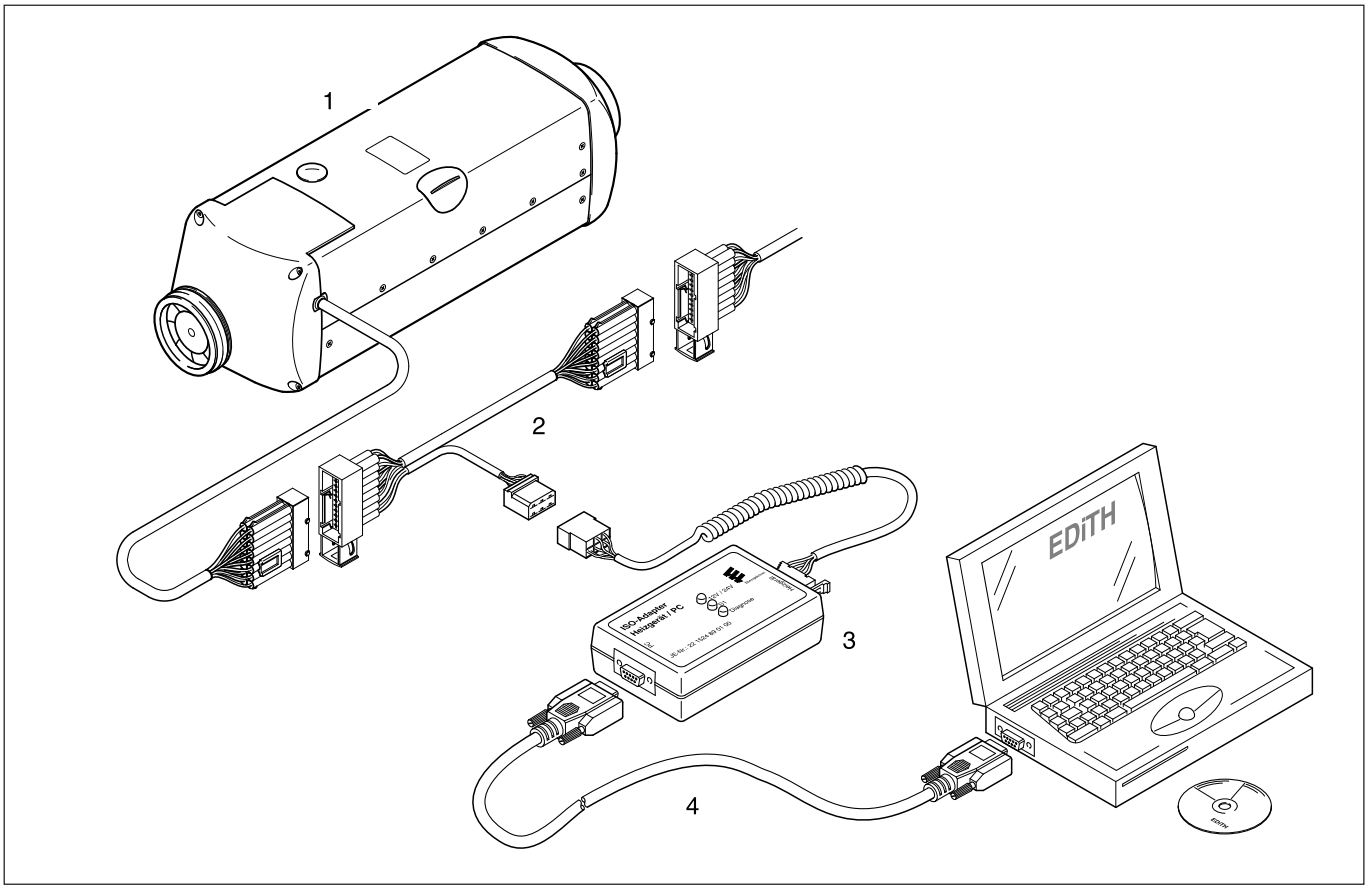

1 Heater
2 Adapter cable
3 ISO adapter
4 SUB-D connection cable

4 Troubleshooting

EDiTH customer service program with basic adapter

EDiTH basic adapter
(Order No.: 22 1532 89 00 00)

An additional extension is required to check the control box (Order No.: 22 1537 89 00 00).

Please note!

- It is important to always follow the precise connection order as given below!
- The Hall sensor integrated in the control box can only be properly tested in the control box is correctly placed on the extension.
- Only push or pull on the connectors, not on the cables!
- Only use the network cable and RS232 cable with snap ferrites included in the scope of supply. Use original accessories with snap ferrites only to connect the test equipment.
- Not only the defective component, but also a defective current circuit results in a fault being displayed.
- Fault code, fault description, cause / remedial action are described on pages 20 – 24.

Caution!
Magnetic field!

During the test operation a magnetic field develops at the adapter. Therefore, do not place any objects such as data media, credit cards, etc. on the adapter or in its immediate vicinity.

Connect basic adapter

- Start computer and wait until the system has successfully booted.
- Start PC software.
- Insert the unit connector of the mains cable in the basic adapter (A) and connect the mains connection (C) to the mains.
- Connect the SUB-D connection cable (B) with the PC and basic adapter (A).

Connect extension and test control box

- Connect the extension to the basic adapter (A).
- Connect the control box (E) to the extension and the adapter (F).
- Switch on the basic adapter (A) at the mains switch (D).
- Select the control box version and operating voltage (12 V / 24 V) in the PC software.
- Start the control box test with the PC software.
  A more detailed description of how to operate the basic adapters (A) is given in the EDiTH online help.

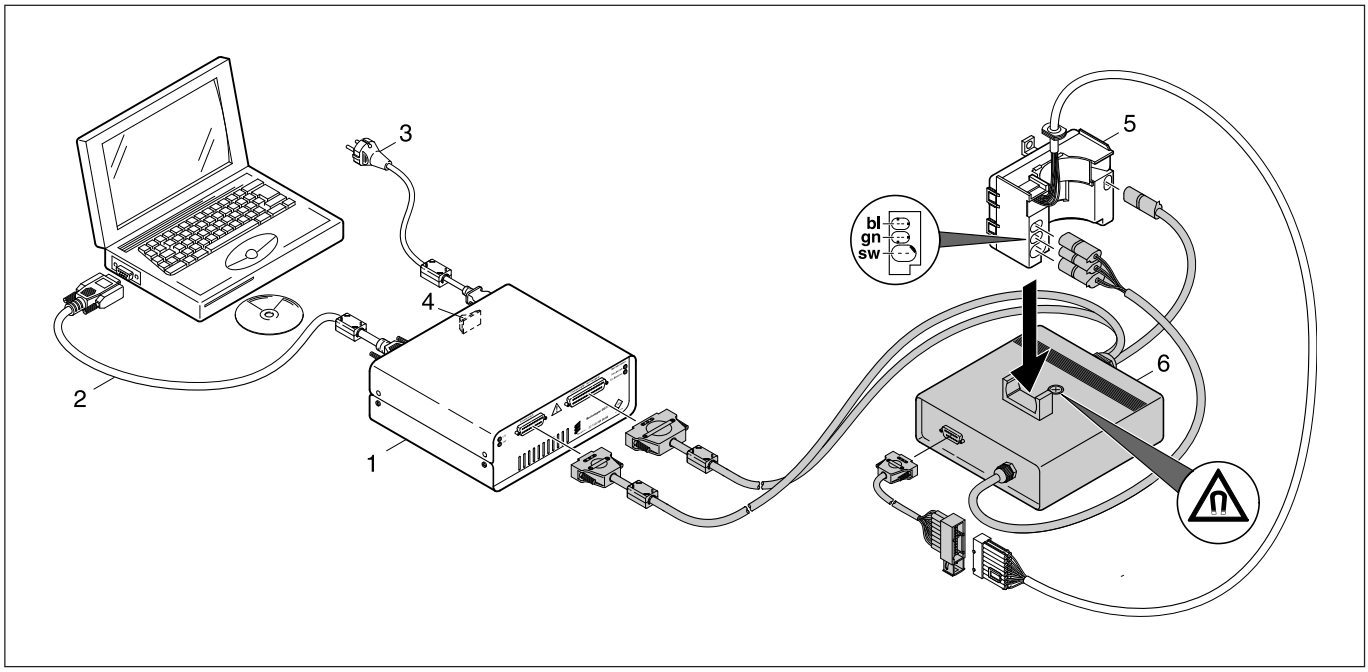

1 Basic adapter
2 SUB-D connection cable
3 Mains connection
4 Mains switch
5 Control box
6 Adapter

Cable colours

sw = black
gn = green
bl = blue

Module timer

(Order No.: 22 1000 30 34 00)

The current fault is displayed as “AF” and is always written in memory position F1.
Preceding faults are moved to the memory locations F2 – F5, if necessary the contents of memory position F5 is overwritten.

Please note!

- Not only the defective component, but also a defective current circuit results in a fault being displayed.
- Fault code, fault description, cause / remedial action are described on pages 20 – 24.

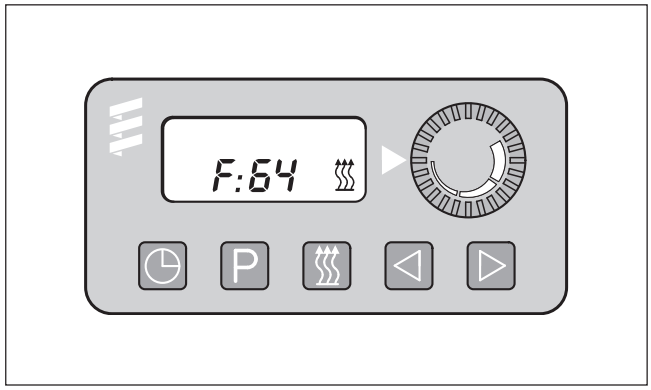

–Time
P –Preset
–Heat
–Reverse
–Forward

Query fault memory F1 – F5

Condition:
The heater is switched off.

- Press key –> the heater is switched on.
- Press key and keep pressed, then press P key within 2 seconds.
  Display is as follows:
  AF = current fault
  3 digit number = fault code
  flashes.
- Press key once or several times, fault memory positions F1 – F5 are displayed.

Cancel the control box lock and simultaneously delete the fault memory

Condition:
An electrical connection exists from terminal 15 (ignition) to the module timer, 12-pin connector, chamber 10.

- Press key
  Display is as follows:
  the current fault F15 or F50.
- Press button , keep it depressed and then press button P within 2 seconds.

  The module timer is now in the “Query fault memory” program.
- Switch off ignition (terminal 15).
- Simultaneously press button and button P, in addition, switch on the ignition (terminal 15) and wait until the following appears in the display.

  After ignition “ON” the following appears in the display:

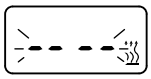

Display flashes,
Heater symbol does not flash

- Switch the heater off and on –> the control box is unlocked, the heater restarts.

  After switching the heater off and on and renewed query of the fault memory, the following appears in the display:

Display flashes,
Heater symbol does not flash

4 Troubleshooting

Fault diagnosis using the radio remote control TP5

TP5 radio remote control
Order No. 22 1000 32 01 00

If faults occur while the heater is running, they are displayed with „Err“ after the mobile unit is activated.

In order to carry out the diagnosis, the diagnosis cable (blue / white) must be connected to the stationary unit and the heater cable harness. To this end, please refer to and follow the circuit diagram for the TP5 radio remote control and the heater.
The current fault “F0” is displayed. The stored faults “F1” to “F5” can be queried.The current fault is displayed.

Please note!

- In order to carry out the diagnosis, the diagnostics cable (bl/ge at heater connector, bl/ws at cable harness connector) must be connected to the stationary unit and the heater cable harness. To this end, please refer to and follow the circuit diagram for the radio remote control TP5 and the heater.
- If the diagnostics cable is not connected, the “Diagnosis” menu is blocked.
- Not only the defective component, but also a defective current circuit results in a fault being displayed.
- Fault code, fault description, cause / remedial action are described on Pages 20 – 24.

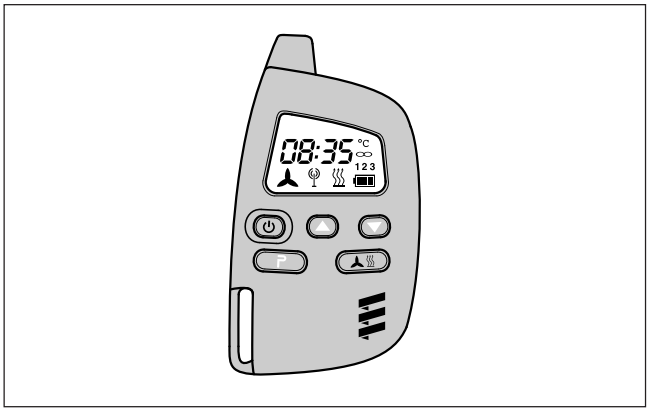

- ⏻ Button to activate / deactivate the mobile unit
- ▲ Button for forward time setting
- ▼ Button for backward time setting
- P Button for activating the possible settings
- Button for switching heat / ventilate ON / OFF; Activate / deactivate preselected time

Enquire / delete fault memory

Use the ⏻ button to activate the mobile unit.
Switch on the heater with the button.
Press the P button twice to open the Time setting menu – the time flashes in the display.

Press the P button for approx. 2 sec – until the following appears in the display:

Press button.
Press P button.
Press button twice.
Press P button.

Malfunction in heater:

Heater has no malfunction:

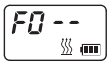

Use the ▲ and ▼ buttons to call up the fault memory positions 1 to 5.

Delete fault memory / cancel the control box lock

Use the P button to delete the fault memory.

To confirm, press the button for approx. 2 sec until the following appears in the display:

4 Troubleshooting

EasyStart R+ radio remote control

(Order No.: 22 1000 32 80 00)

EasyStart T timer

(Order No.: 22 1000 32 88 00)

If faults occur while the heater is running, they are displayed with “Err” after the mobile unit or timer is activated.

The current fault is displayed. The stored faults “F1” to “F5” can be queried.

Please note!

- In order to carry out the diagnosis, the diagnostics cable (bl/ge at heater connector, bl/ws at cable harness connector) must be connected to the stationary unit and the heater cable harness. To this end, please refer to and follow the circuit diagram for the radio remote control and the heater.
- If the diagnostics cable is not connected, the “Diagnosis” menu is blocked.
- Not only the defective component, but also a defective current circuit results in a fault being displayed.
- Fault code, fault description, cause / remedial action are described on Pages 20 – 24.

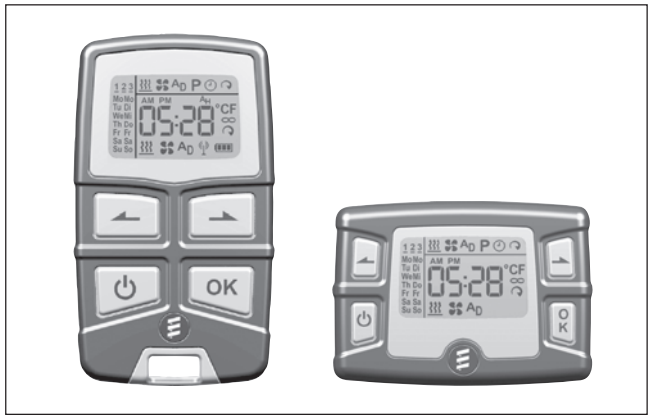

Back control key

Next control key

ON / OFF activation key mobile unit / timer

OK key (symbol selection / confirm input)

Enquire / delete fault memory

Activate mobile part / timer
(see EasyStart R+ / EasyStart T operating instructions)

Confirm symbol with OK.

Heater is switched on.

Confirm operating time with OK.

Briefly press **and** **simultaneously**.

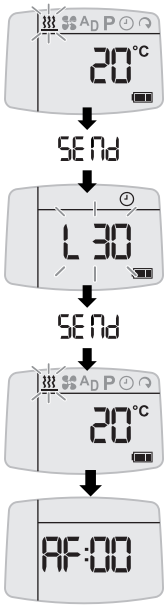

The following actions are possible

- Call up fault memory.
  Call up the fault memory positions F1 – F5 with or .
- Call up fault memory again.
  Briefly press **and** **simultaneously.**
- Delete fault memory
  (display dEL)
  Press OK.

Press OK again.

The diagnosis is completed.

Switch off heater.

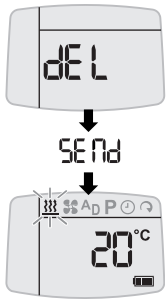

4 Troubleshooting

Fault code Display	Fault description	Comments • Remedial action
000	No faults	—
004	Warning: Short circuit in control box, fresh air output	• Disconnect connector S1 / B1 at the heater and at the connector B1, PIN 16 check the cable up to the fresh air fan relay for short circuit to negative, if ok –> replace control box, see page 28.
005	Warning: Short circuit in control box, car alarm output	• Disconnect connector S1 / B1 at the heater and at the connector B1, PIN 15 check the cable up to the relay isolating switch or the car alarm input for short circuit to negative, if ok –> replace control box, see page 28.
009	ADR shutdown	ADR shutdown due to signal change from (+) to (–) at connector S1, PIN 13 (D+) or plus signal at connector S1, PIN 14 (HA+).
010	Overvoltage cutout	Overvoltage applied to control box for at least 20 seconds without interruption – heater not working. • Disconnect connector S1 / B1 at the heater, start the vehicle's engine, measure the voltage at connector B1 between PIN 1 (cable 2.5^2 rt) and PIN 10 (cable 2.5^2 br). *AIRTRONIC* L 12 volt – voltage >16 volt —> check generator regulator. *AIRTRONIC* L 24 volt – voltage >32 volt —> check generator regulator.
011	Undervoltage cutout	Undervoltage applied to control box for at least 20 seconds without interruption – heater not working. • Disconnect connector S1 / B1 at the heater, the vehicle's engine is switched off, measure the voltage at connector B1 between PIN 1 (cable 2.5^2 rt) and PIN 10 (cable 2.5^2 br). The measured value and the voltage at the battery should be the same. In case of a voltage drop, check the fuses, the supply cables, the negative connections and the positive support point on the battery for corrosion and correct contact.
012	Overheating at the overheating sensor (combination sensor)	Temperature of the overheating sensor too high. • Check hot air pipes for blockage –> remove blockage. • Sum of the component ratings of air-conducting parts is too large –> Check air system, if necessary re-lay – for component ratings, please refer to additional parts catalogue. • Check overheating sensor, for diagram and table of values please refer to page 30, if ok –> measure fuel quantity, see page 33.
013	Overheating at the flame sensor (combination sensor)	Flame sensor signals temperature at heat exchanger is too high. • Check hot air pipes for blockage –> remove blockage. • Sum of the component ratings of air-conducting parts is too large –> Check air system, if necessary re-lay – for component ratings, please refer to additional parts catalogue. • Check flame sensor, if ok –> check overheating sensor, if overheating sensor defective –> replace combination sensor, if overheating sensor ok –> measure fuel quantity, see page 33, for diagram and table of values for flame sensor and overheating sensor please refer to page 30.
014	Temperature difference between flame sensor and overheating sensor too large	Temperature difference between flame sensor and overheating sensor too large • Check hot air pipes for blockage –> remove blockage. • Sum of the component ratings of air-conducting parts is too large –> Check air system, if necessary re-lay – for component ratings, please refer to additional parts catalogue. • Check flame sensor, if ok –> check overheating sensor, if overheating sensor defective –> replace combination sensor, if overheating sensor ok –> measure fuel quantity, see page 33, if fuel quantity ok –> replace control box, see page 28. For diagram and table of values for flame sensor and overheating sensor see page 30.

Fault code Display	Fault description	Comments • Remedial action
015	Operating lock-out	The fault code 015 is displayed, if the heater was switched back on after the fault code display 017. The hardware threshold value for the overheating sensor has been exceeded –> the control box is locked. • Switch off control box, see page 28.
017	Overheating	The hardware threshold value for the overheating sensor has been exceeded, because the control box failed to recognise the fault code 012 or 013 –> the control box is locked. If the heater is switched on again, the fault code 015 is displayed. • Switch off control box, see page 28.
020	Glow plug – interruption	• Check glow plug is working and for continuity. 12 volt heater – approx. 0.6 Ω ± 0.04 Ω (heat resistance) 24 volt heater – approx. 2 Ω ± 0.2 Ω (heat resistance) • If the values of the continuity test and functional test are ok –> check the glow plug's lead harness for damage and continuity, if ok –> replace control box, see page 28.
021	Glow plug output (–), overload or earth short circuit	• Check glow plug is working and for continuity. 12 volt heater – approx. 0.6 Ω ± 0.04 Ω (heat resistance) 24 volt heater – approx. 2 Ω ± 0.2 Ω (heat resistance) • If the values of the continuity test and functional test are ok –> check the glow plug's lead harness for damage and continuity, if ok –> replace control box, see page 28.
022	Glow plug, output (+), short circuit after U_B (battery voltage)	• Check glow plug lead harness for correct laying and damage, if ok —> check lead harness for continuity, if ok —> replace control box, see page 28.
025	Diagnostics cable bl/ws – short circuit – after U_B (battery voltage)	This fault code cannot be displayed as the diagnostics cable is probably defective. • Check diagnostics cable for correct laying and possible damage..
030	EMK blower motor outside the permissible range	Impeller or combustion air blower motor blocked (frozen, soiled, sluggish, lead harness grinds against shaft end ...) • Remove blockage. • Check wiring for short circuit. • Speed measurement of the combustion air blower motor: – Dismantle combustion air fan, see page 31. – Heater 12 V: carry out test with 11.3 volt ±0.1 volt. – Heater 24 V: carry out test with 23.6 volt ±0.1 volt. Remove the connector from the control box and apply voltage. Apply marking (white paint) to the impeller and measure the speed using a non-contact r.p.m. counter: If the measured speed in the "high" heating level is outside the range – Heater 12 V: n = 4650–7000 rpm, – Heater 24 V: n = 4650–6500 rpm, then replace the combustion air fan, see page 31. If the measured speed is within the range, then replace the control box, see page 28.
031	Blower motor interruption	• Check that the lead harness of the blower motor has been correctly laid and for damage, if ok –> remove lead harness at control box and check for continuity, if ok –> replace control box, see page 28.

4 Troubleshooting

Fault code Display	Fault description	Comments • Remedial action
032	Blower motor – earth short circuit **Please note!** In the 12 volt heater, carry out the functional check with max. 11.3 volt. In the 24 volt heater, carry out the functional check with max. 23.6 volt. The component is destroyed if the voltage values are exceeded. **Ensure the power pack has adequate short-circuit resistance – min. 20 A.**	• Carry out functional test on the blower motor, to do this remove the connector from the control box. Apply a voltage of 11.3 v or 23.6 V ±0.1 v to the blower motor and after 40 sec measure the current intensity. Heater 12 volt: current intensity < 9 A or heater 24 volt: current intensity < 4 A – blower motor ok –> replace control box, see page 28. Heater 12 volt: current intensity > 9 A or heater 24 volt: current intensity > 4 A –> replace combustion air fan, see page 31. • Check wiring for short circuit.
034	Blower motor outlet (+), short circuit after U_B (battery voltage)	• Check that the lead harness of the blower motor has been correctly laid and check for damage, if ok —> remove lead harness at control box and check for continuity, if ok —> replace control box , see page 28.
047	Metering pump short circuit or overload	• Remove connector from the metering pump, if the fault code 048 (interruption) is displayed the metering pump is defective –> replace metering pump. • If the fault code 047 continues to be displayed, disconnect connector S1 / B1 at the heater, and at the connector B1, PIN 5 check the cable 12 gn / rt up to the metering pump for short circuit to negative (PIN 10), if ok –> replace control box, see page 28.
048	Metering pump interruption	• Remove connector from the metering pump and measure the resistance value of the metering pump (12 V = 9,5 Ω ±0.5 Ω / 24 V = 36 Ω ±1.8 Ω), if resistance value ok –> reconnect cable loom to the metering pump. • Disconnect connector S1 / B1 at the heater and measure the resistance value between PIN 5 and PIN 10, if ok –> replace control box, see page 28.
049	Metering pump outlet (+), short circuit after U_B (battery voltage)	• Check that the lead harness of the metering pump has been correctly laid and check for damage, if ok —> remove lead harness and check for continuity, if ok —> replace control box, see Page 28.
050	Too many failed start attempts (operating lock-out)	The control box locks after too many failed start attempts (max. 255 start attempts). • Unlock the control box by deleting the fault memory using the EDiTH customer service program, diagnostic unit or various control units, see page 13 – 19.
051	Flame detected when switching on	If, after being switched on, the resistance value of the flame sensor is 1274 Ω (> 70 °C) the heater's fan rungs for approx. 15 min to cool down, if the resistance does not fall below the aforementioned value within 15 min the heater is switched off. • Check the flame sensor, for diagram and table of values please refer to page 30, if ok –> replace control box, see page 28.
052	Safety time exceeded	No flame detected during the start phase. • Check exhaust and combustion air system. • Check fuel supply / measure fuel quantity, see page 33. • Check spark plug (see fault code 020 and 021). • Check flame sensor, for diagram and table of values please refer to page 30, if ok –> replace control box, see page 28.
053 054 055 056	Flame cutout in the „POWER“ control stage „HIGH“ control stage „MEDIUM“ control stage „LOW“ control stage	The heater has ignited (flame detected) and signals flame cutout during a power stage. • Check exhaust and combustion air system. • Check fuel supply / measure fuel quantity, see page 33. • Check flame sensor, for diagram and table of values please refer to page 30, if ok –> replace control box, see page 28.

4 Troubleshooting

Fault code Display	Fault description	Comments • Remedial action
060	External room temperature sensor – interruption	• Disconnect the plug-in connection of the external room temperature sensor and measure the resistance value, see page 9 for diagram and values table, if temperature sensor ok –> reconnect plug-in connection. • Disconnect connector S1 / B1 at the heater and measure the resistance value in connector housing B1 between PIN 6 and PIN 12. If an interruption exists the ohmic value between PIN 6 and PIN 12 > 3000 Ω . If resistance value ok –> replace control box, see page 28.
061	External room temperature sensor – short circuit	• Disconnect plug-in connection of the external room temperature sensor, if error code 060 is displayed –> check external room temperature sensor, see page 9 for diagram and values table. If external room temperature sensor ok –> check the connection cables 0.5^2 gr and 0.5^2 br/ws for short circuit, if ok –> reconnect plug-in connection. • Disconnect connector S1 / B1 at the heater and measure the resistance value in connector housing B1 between PIN 6 and PIN 12. If a short circuit exists the ohmic value between PIN 6 and PIN 12 < 800 Ω. If the error 061 continues to be displayed, –> replace control box, see page 28.
062	Control unit – interruption	• Remove connector at the control unit and measure the resistance value of the setpoint potentiometer, for connector pins see page 36 ff. If the resistance value is ok –> reconnect connector at the control unit. • Disconnect connector S1 / B1 at the heater and measure the resistance value between PIN 6 and PIN 7 in the connector housing B1, if resistance value is ok –> replace control box, see page 28. Resistance value in case of interruption between PIN 6 and PIN 7 > 3000 Ω. Normal value: 1750 Ω ±30 Ω – 2180 Ω ±80 Ω.
063	Control unit – short circuit Fault recognition only works in heating mode. If, on the other hand, the short circuit has already occurred and then the heater is switched on, „Ventilation“ is active (not a fault code).	• If „Ventilate“ switch is installed, disconnect it and check it is working. If ok –> disconnect the connector at the control unit, if error code 062 is displayed, replace control unit. • If control unit ok –> check connection cables 0.5^2 gr / rt and 0.5^2 br / ws for short circuit, if ok –> reconnect connector at control unit. • Disconnect connector S1 / B1 at the heater, if the error 063 continues to be displayed –> replace control box, see Page 28 Resistance value in case of short circuit between PIN 6 and PIN 7 < 800 Ω. Normal values: 1750 Ω ±30 Ω – 2180 Ω ±80 Ω.
064	Flame sensor (combination sensor) – interruption	• Dismantle control box and disconnect green connector from control box. Check flame sensor, for diagram and table of values please refer to page 30, if flame sensor ok –> replace control box, see page 28. Resistance value in case of interruption > 3000 Ω.
065	Flame sensor (combination sensor) – short circuit	• Dismantle control box, remove green connector from control box, if error 064 is displayed –> replace combination sensor, see page 29. If error 065 continues to be displayed –> replace control box, see page 28. Resistance value in case of short circuit < 500 Ω, see also diagram on page 30.
071	Overheating sensor – interruption	• Dismantle control box, disconnect blue and green connectors from control box. Measure resistance value at the blue connector PIN 1 (cable 0.5^2 bl) and at the green connector PIN 2 (cable 0.5^2 br / ws), if ok –> replace control box, see page 28. Resistance value in case of interruption >700 kΩ, see also diagram on page 30.
072	Overheating sensor – short circuit	• Dismantle control box, remove blue connector from control box, if error 071 is displayed –> replace combination sensor, see Page 27. If error 072 continues to be displayed –> replace control box, see page 28. Resistance value in case of short circuit < 120 Ω, see also diagram on page 30.
074	Control box defective	• Overheating threshold value is not detected by control box —> replace control box, see page 28.

4 Troubleshooting

Fault code Display	Fault description	Comments • Remedial action
090	Control box defective (internal fault)	Replace control box, see page 28.
092	Control box defective (ROM error)	Replace control box, see page 28.
093	Control box defective	Replace control box, see page 28.
094	Control box defective (EEPROM error)	Replace control box, see page 28
095	Control box defective	Replace control box, see page 28.
096	Internal temperature sensor defective	Replace control box, see page 28 or use external room temperature sensor.
097	Control box defective	Replace control box, see page 28.
098	Control box defective	Replace control box, see page 28.
099	Too many resets in sequence	• Voltage short-term < 5 – 6 volt (for 12 volt) or < 7 – 8 volt (for 24 volt). • In case of a voltage drop, check the fuses, the supply cables, the negative connections and the positive support point on the battery for corrosion and correct contact.
	Transistor error in control box	• Test control box with testing device, if ok —> check lead harness of the external components has been correctly laid and check for damage, if ok —> check lead harness for continuity, if ok —> replace control box, see page 28.

5 Repair instructions

Repair instructions

The permitted repair work to the heater is described in the „Repair Instructions“ chapter. If extensive repairs are necessary, it makes sense to dismantle the heater.

The heater is assembled in the reverse order, if applicable not additional instructions.

Please note!

After completing all the work on the heater, you must carry out a functional check.

Always observe the following safety instructions before working on the heater

Danger!
Risk of injury, burns and poisoning!

- Always switch off the heater beforehand and leave it to cool.
- Disconnect the battery.
- The heater must not be operated in closed rooms such as garages or workshops.
  Exception:
  Exhaust suction available directly at the entry to the exhaust pipe.

Caution!

- The seals of dismantled components must be renewed.
- During repair work, check all components for damage and if necessary replace.
- Check connector contacts, plug-in connections and cables for corrosion and damage and if necessary repair.
- Only ever use Eberspächer spare parts if replacements are necessary.
- After working on the coolant circuit the level of the coolant must be checked and if necessary topped up according to the vehicle manufacturer’s instructions.
  The coolant circuit must then be vented.
- Operation or the after running of the heater may only be stopped in an emergency (see „EMERGENCY OFF“ page 7) by interrupting the battery current (risk of heater overheating).

Special tool

AMP release tool

The AMP release tool is used to unclip push-on sleeves from a connector housing.

This release tool can be ordered directly from Eberspächer GmbH & Co. KG.

- For Micro Timer Order No. 206 00 205
- For Junior Power Timer Order No. 206 00 215

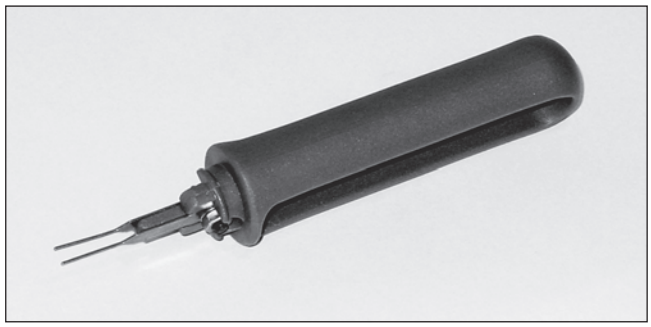

5 Repair instructions

Assembly drawing

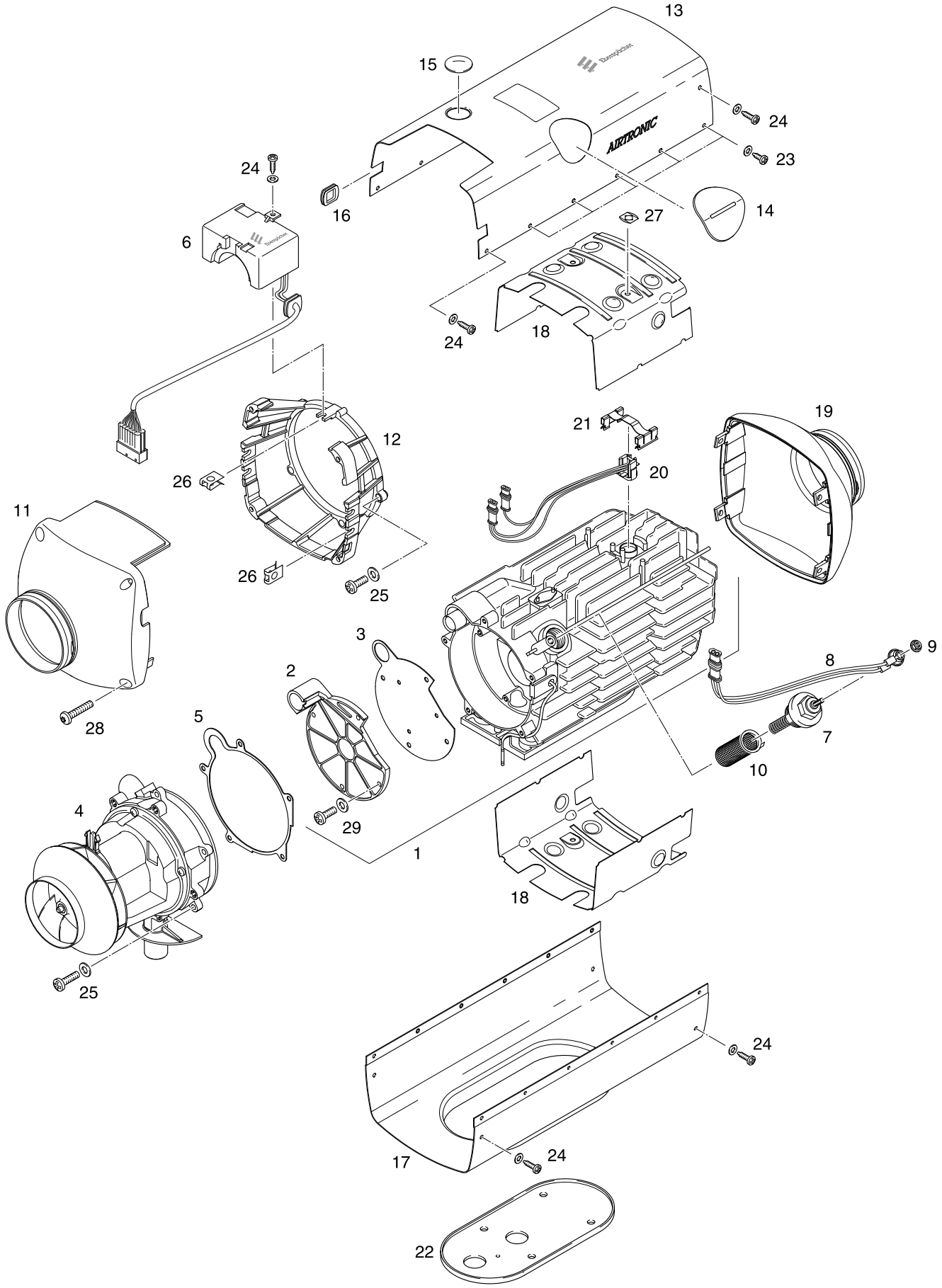

Parts list

1 Heat exchanger, complete with combustion chamber
2 Combustion chamber cover
3 Seal combustion chamber
4 Combustion air fan
5 Seal
6 Control box
7 Glow plug
8 Connection cable for glow plug
9 Fixing nut M4
10 Lining
11 Intake hood
12 Shell holder
13 Upper jacket shell
14 Grommet (glow plug)
15 Grommet (Rotary valve)
16 Grommet (cable harness)
17 Lower jacket shell
18 Heat shield
19 Outlet hood
20 Combination sensor (flame / overheating sensor)
21 Combination sensor retaining clips
22 Sealing, flange
23 Single-thread screw B 3,5 x 9,5 Z1 DIN 7981 ZN12FF
24 Single-thread screw B 3,5 x 13 Z1
25 Fillister head bolt M5 x 20 Z3 DIN 7895 4.8 ZN8
26 C-Clip single-thread nut
27 DUO-Clip, (retaining clips)
28 Screw M5 x 25, TORX DIN 7500 C
29 Fillister head bolt M5 x 16 Z3 DIN 7895 4.8 ZN8

5 Repair instructions

Repair step 1
Dismantle / assemble glow plug
(Figure 1)

- Remove large angular rubber grommet.
- Unscrew M4 fixing nut of the connection cable and screw out the glow plug using a SW 19 socket spanner.
- Install in the reverse order.
  Glow plug torque $20^{\pm 2}$ Nm.
  Connection cable nut torque 1.4 Nm.

Please note!

- With the glow plug dismantled, visually check the lining of the installed glow plug support for dirt. If the lining is highly soiled and its surface closed, renew the lining (see repair step 2).
- Ensure the rubber grommet sits securely and tightly!

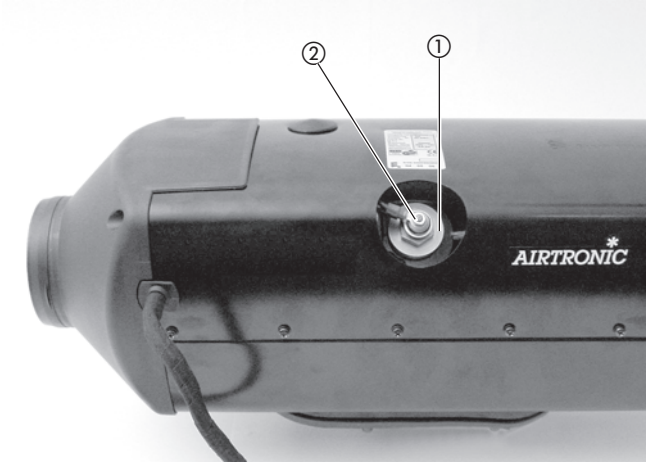

Figure 1
① Glow plug
② Fixing nut for connection cable

Repair step 2
Dismantle / assemble lining
(Figure 2)

- Repair step 1, dismantle / assemble glow plug.
- Use long-nose pliers to pull the lining out of the support from above.
- Clean the support by blowing it with compressed air.
- If necessary, carefully push through a wire.
- Carefully install the new lining. No special tools required.

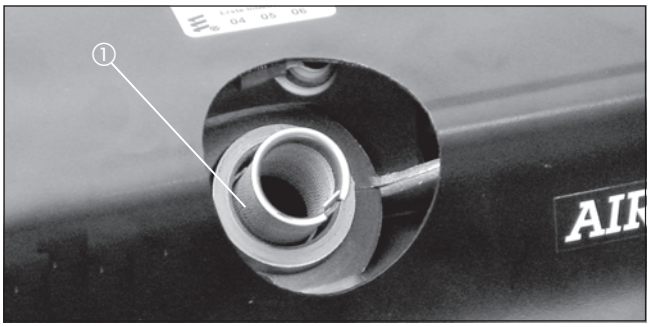

Figure 2
① Lining

Repair step 3
Dismantle / assemble control box
(Figure 3)

- Unscrew the 4 fixing screws of the intake hood.
- Remove intake hood.
- Check inserted seal for damage, replace if necessary.
- Unscrew the fixing screw of the control box.
- Remove grommet from the upper jacket shell.
- Press together the retaining clamps.
- Remove the control box from above.
- Remove all connection cables from the control box. (Note the position of the cables). The control box can now be removed.
- Install in the reverse order.
  Torque for intake hood fixing screws $4.0^{+0.5}$ Nm.
  Torque for control box fixing screw $1.75^{\pm 0.25}$ Nm.

Please note!

When assembling the control box ensure that all the connection cables have been inserted in the control box (non-reversible).

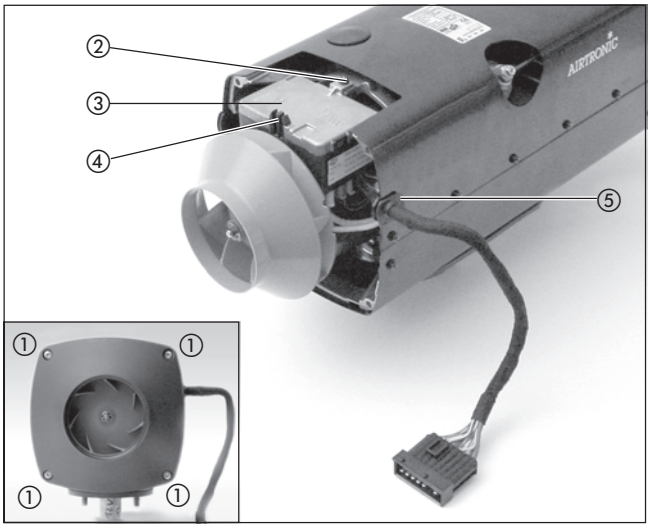

Figure 3
① Intake hood fixing screws
② Control box fixing screw
③ Control box
④ Retaining clamp
⑤ Grommet

Repair step 4
Dismantle / assembly combination sensor (overheating / flame sensor)
(Figure 4 – 6)

- Repair step 3, dismantle / assemble control box.
- Unscrew the 4 fixing screws of the outlet hood and remove outlet hood.
- Unscrew the 12 fixing screws of the upper jacket shell and remove the upper jacket shell.
- Use a screwdriver to remove both DUO-clip (retaining clips) at the heat shield and remove the heat shield.
- Pull off the retaining clip of the combination sensor (flame / overheating sensor) from above.
- Install in the reverse order.
  Torque for outlet hood fixing screws 1.45 $^{\pm 0.5}$ Nm.
  Torque for upper jacket shell fixing screws 1.45 $^{\pm 0.5}$ Nm.

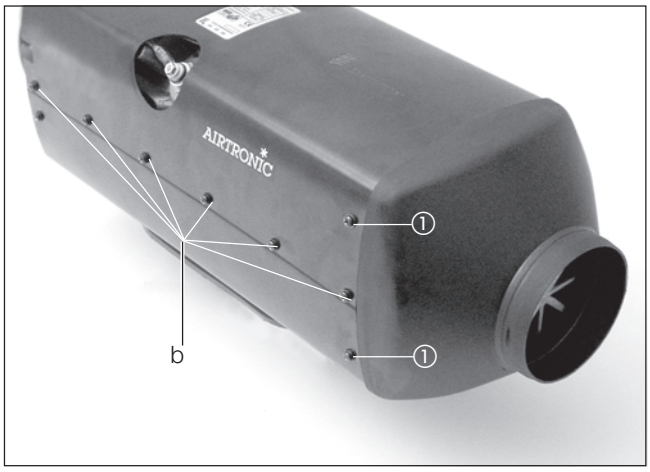

Figure 4
① Outlet hood fixing screws (B 3.5 x 13) (opposite side of unit is mirror image)
② Fixing screws of upper jacket shell (10 No. B 3.5 x 9.5 and 2 No. B 3.5 x 13)

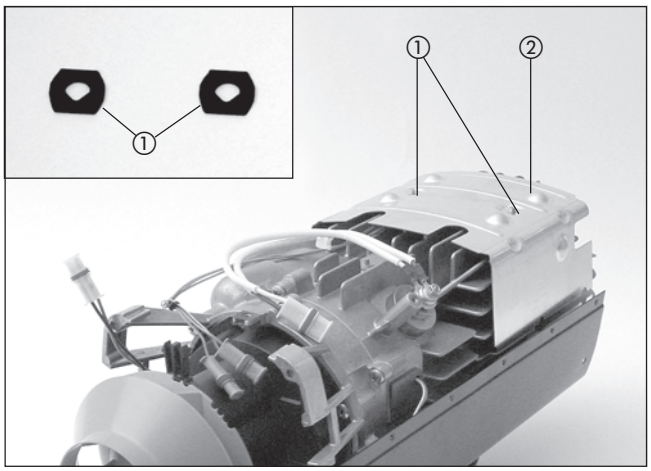

Figure 5
① DUO-clip (retaining clips)
② Heat shield

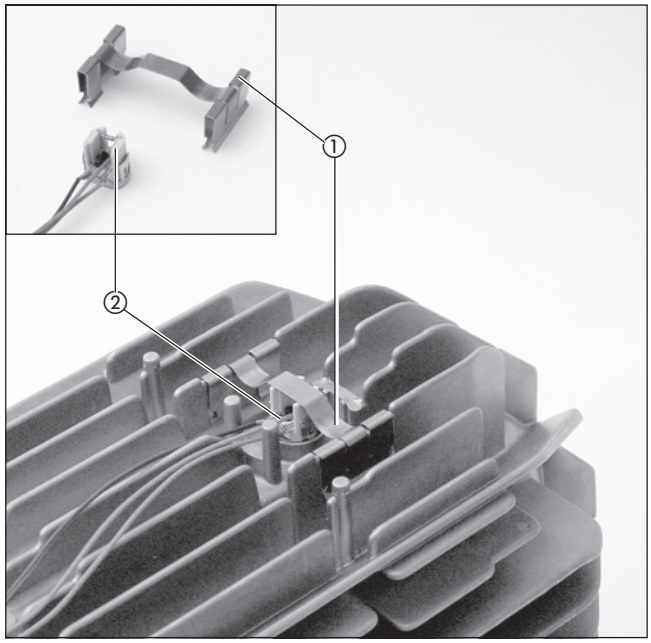

Figure 6
① Combination sensor retaining clips
② Combination sensor (flame / overheating sensor)

Circuit diagram for combination sensor (overheating sensor / flame sensor)

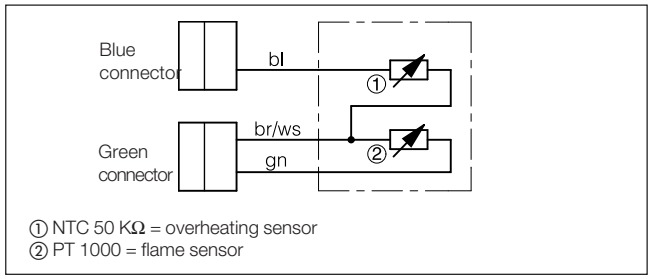

5 Repair instructions

Check combination sensor

The external temperature sensor must be checked using a digital multimeter. If the resistance value does not match the curve in the diagram, replace the combination sensor.

Please note!

Note the max. temperature of 320° for the test.

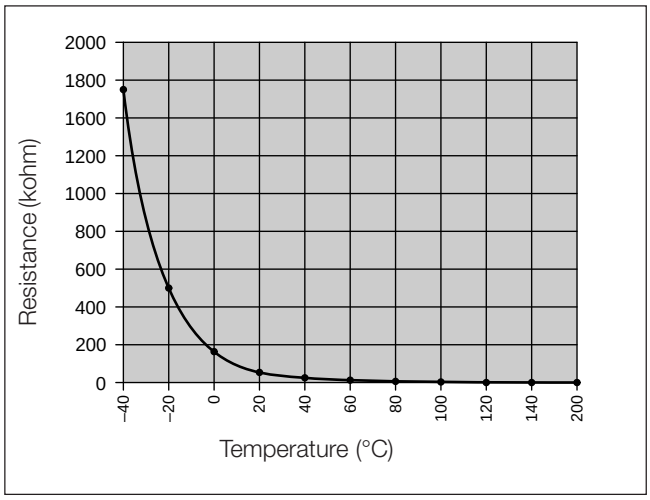

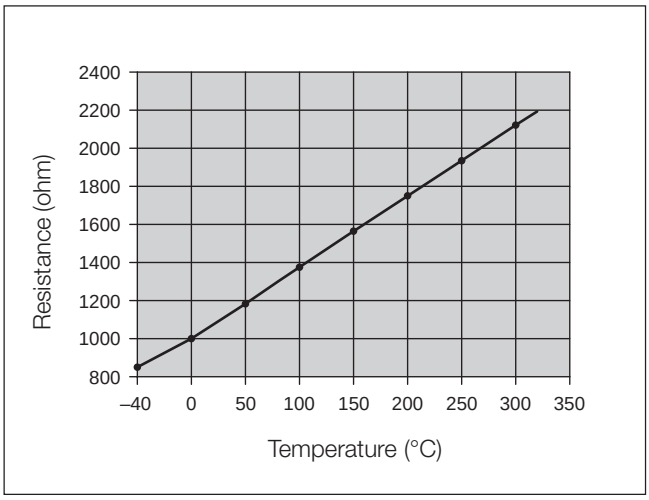

Table of overheating sensor values

Temperature °C	Resistance kΩ min.	max.
–40	1597.00	1913.00
–20	458.80	533.40
0	154.70	175.50
20	59.30	65.84
40	25.02	28.04
60	11.56	13.16
80	5.782	6.678
100	3.095	3.623
120	1.757	2.081
140	1.050	1.256
160	0.6554	0.792
180	0.4253	0.5187
200	0.2857	0.3513

Table of flame sensor values

Temperature °C	Resistance Ω min.	max.
–40	825.90	859.60
0	980.00	1020.00
40	1132.30	1178.50
80	1282.80	1335.10
120	1431.50	1489.90
160	1578.30	1642.80
200	1723.40	1793.70
240	1866.60	1942.80
280	2008.10	2090.00
320	2147.70	2235.40

Repair step 5
Dismantle / assemble combustion air fan
(Figure 7 – 11)

- Repair step 3, dismantle / assemble control box.
- Unscrew the 4 fixing screws of the outlet hood and remove outlet hood.
- Unscrew the 12 self-tapping screws of the upper jacket shell and remove the upper jacket shell.
- Remove flange seal.
- Unscrew the 2 self-tapping screws of the lower jacket shell at the shell holder and remove the lower jacket shell.
- Unscrew the 4 screws of the shell holder.
- Unscrew the 5 screws of the combustion air fan.
- Remove the combustion air fan.

- Install in the reverse order.
  Torque for outlet hood fixing screws 1.45 $^{\pm 0.5}$ Nm.
  Torque for upper and lower jacket shell fixing screws 1.45 $^{\pm 0.5}$ Nm.
  Torque for shell holder fixing screws 2.5 $^{\pm 0.5}$ Nm.
  Torque for combustion air fan fixing screws 4.0 $^{\pm 0.5}$ Nm.

Please note!

Always renew the seal between the combustion air fan and the heat exchanger.

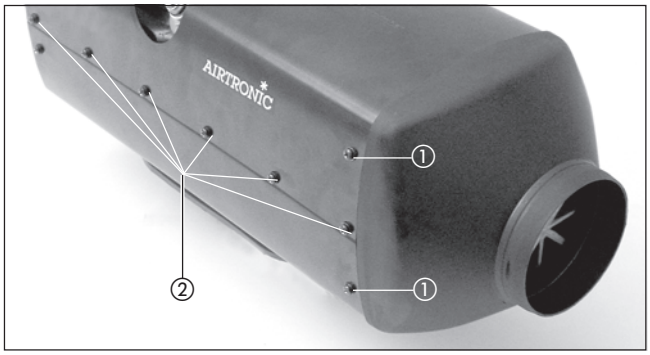

Figure 7
① Outlet hood fixing screws (B 3.5 x 13)
(opposite side of unit is mirror image)
② Fixing screws of upper jacket shell
(10 No. B 3.5 x 9.5 and 2 No. B 3.5 x 13)

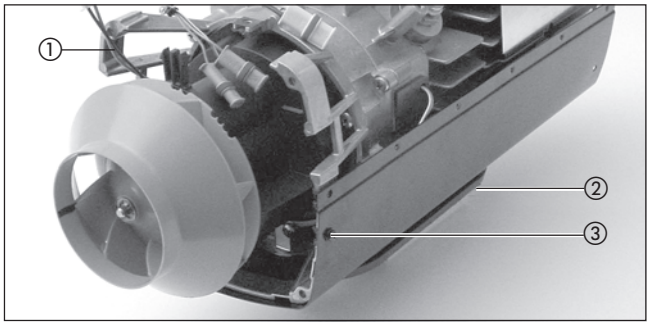

Figure 8
① Shell holder
② Flange seal
③ Fixing screws of lower jacket shell
(2 No. B 3.5 x 13, opposite side of unit is mirror image)

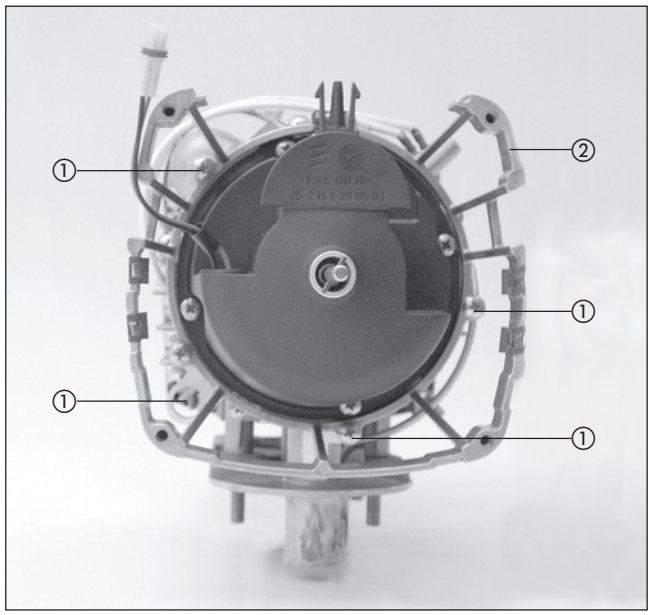

Figure 9 Fan wheel removed for improved view.
① Fixing screws for shell holder
(fillister-head screw M5 x 20)
② Shell holder

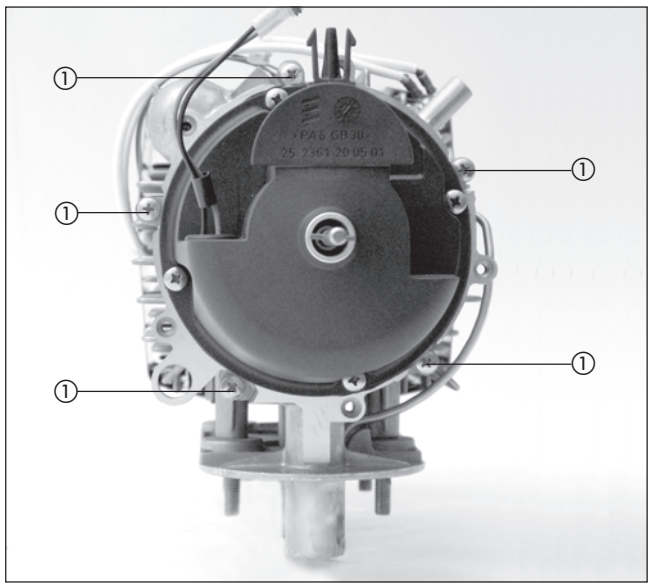

Figure 10 Fan wheel removed for improved view.
① Fastening screws of combustion air fan
(fillister-head screw M5 x 20)

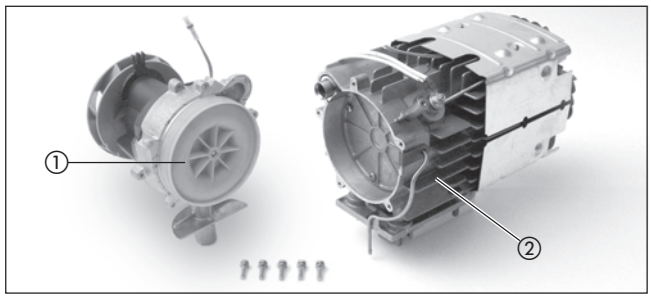

Figure 11
① Combustion air fan
② Heat exchanger

Repair step 6
Replace the combustion chamber cover seal
(Figure 12)

- Repair step 5, dismantle / assemble combustion air fan.
- Unscrew the 4 screws of the combustion chamber cover.
- Remove the combustion chamber cover.
- Remove seal, clean seal surfaces if necessary, install new seal.
- Install in the reverse order.
  Torque of combustion chamber cover fixing screws $3.5^{+0.5}$ Nm.

Please note!

Ensure the combustion air duct sits correctly in the combustion chamber cover.
Tighten the fixing screws ”crosswise“ (i.e. diagonally opposite screws, one after the other).

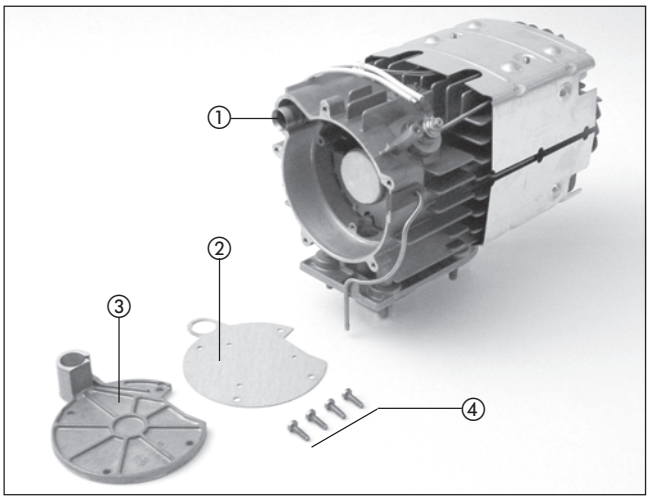

Figure 12
① Combustion air duct
② Seal
③ Combustion chamber cover
④ Fixing screws

Check fuel supply

Before measuring the fuel quantity, check the following points in the fuel supply.

- Check the screen in the metering pump.
- Check the laying of the fuel pipes.
- Check fuel pipes for leaks.
- Check and tighten the hose connections.
- Is the fuel removal installed according to the details in the technical description?

Measuring the fuel quantity

1. Preparation

Remove the fuel pipe at the heater and insert a measuring cylinder (size 25 ml).
Switch on the heater, if the fuel is uniformly pumped (begins approx. 60 sec after being switched on), the fuel pipe is full and vented.
Switch off heater and empty measuring cylinder.

Please note!

For precise fuel measurement at least 11 volt and 22 volt or maximum 13 volt and 26 volt should be applied to the control box during the measurement.

2. Measurement

Switch on heater.
The fuel begins to be pumped approx. 60 sec after switching on the heater.
During the measurement, hold the measuring cylinder at the level of the heater.

After approx. 90 sec of the fuel being pumped it is automatically switched off. Switch off heater! *
Read off the quantity of fuel in the measuring cylinder.

If the measured fuel quantity lies outside the values given below, the metering pump must be replaced.

Heater	***AIRTRONIC* L – B5**	***AIRTRONIC* L – D5**
min. (ml)	14	8
max. (ml)	18	10

* Important, as otherwise fuel will be pumped again after approx. 120 sec.

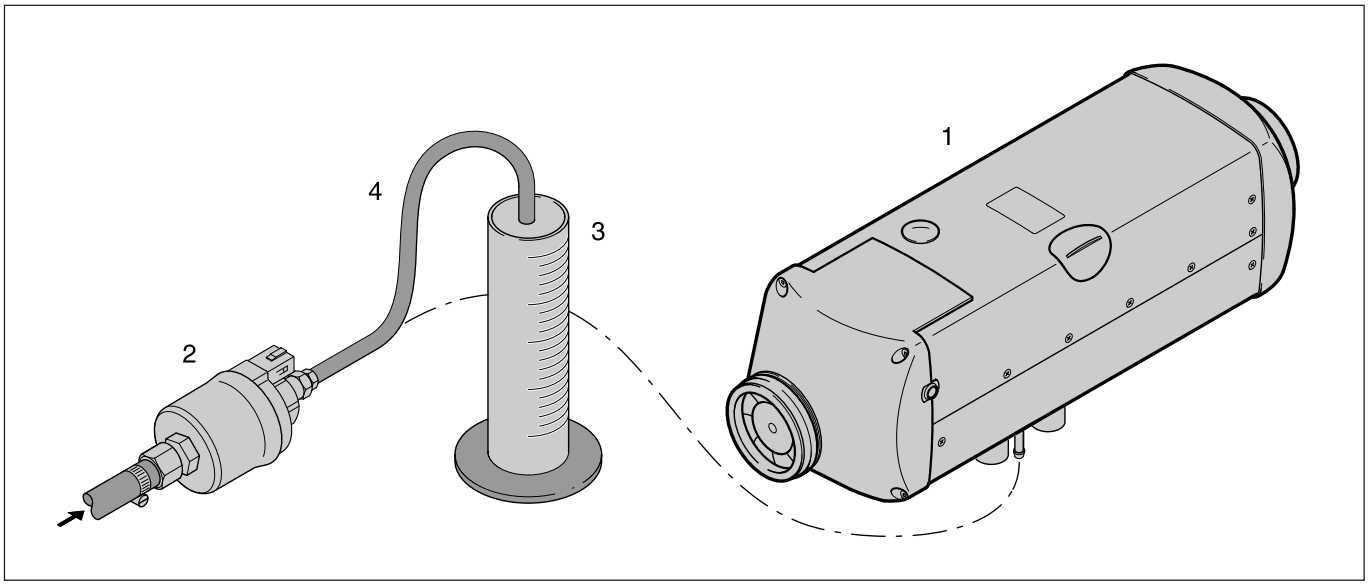

1 Heater
2 Metering pump
3 Measuring cylinder (size 25 ml)
4 Fuel pipe (disconnect at heater and insert in a measuring cylinder).

6 Circuit diagram

Parts list circuit diagrams *AIRTRONIC* L / *AIRTRONIC* L – ADR

1.1 Burner motor
1.2 Glow plug
1.5 Overheating and flame sensor

2.1 Control box
2.2 Metering pump
2.7 Main fuse 12 volt = 25 A
24 volt = 20 A
2.7.1 Fuse, actuation (5 A)

5.1 Battery
5.2.1 Battery operating switch
(operation, e.g. controlled by the ignition lock) d)
5.2.2 Battery isolating switch
(EMERGENCY OFF function for ADR) d)
5.3 Auxiliary drive (HA+)
5.3.1 Auxiliary drive switch
5.5 Generator terminal (D+)

a) Control units and room temperature sensor connected according to the „control units“ circuit diagram.
- ge Switch-on signal (– S+)
- brws Reference signal sensor
- grrt Temperature (setpoint)
- blws Diagnosis
- br Power supply, negative (terminal 31)
- wsrt Switch off the anti-theft alarm system (ADR – feedback signal for timer)
- gr Temperature (actual value)
- rt Power supply, positive (terminal 30)

b) Option
- Fresh air fan
- Vehicle fan control

c) ADR
Dangerous goods transporter in the area of the utility vehicle (e.g. tanker)

d) If only one switching element is used for items 5.2.1 and 5.2.2, it is important to ensure that on activating the „open the battery isolating switch“ function (EMERGENCY OFF function in ADR or similar), the switch always breaks contact immediately (regardless of the heater condition) and all the heater's circuits are disconnected from the battery.

Please note!

- Insulate unused cable ends.
- Connectors and bush housings are shown from the cable inlet side.

Parts list circuit diagram control units / control units – ADR

2.15.1 Temperature sensor (room temperature)
2.15.9 Temperature sensor (outside temperature)

3.1.9 Changeover switch “heat / ventilate”
3.1.16 Radio remote control button
3.1.17 Mini controller *AIRTRONIC*
3.1.18 Button *CALLTRONIC*
3.2.8 Module timer (ADR – potentiometer)
3.2.12 Timer, mini – 12 / 24 volt
3.2.14 Lighting, mini timer – 12 volt only
3.3.6 Radio remote control stationary part TP41i
3.3.7 Radio remote control stationary part TP5
3.3.8 Remote control *CALLTRONIC*
3.8.3 Antenna
3.9.1 Diagnosis, JE diagnosis

a) Connection of control units at the heater
- rt Power supply, plus – terminal 30
- ge Switch-on signal – S+
- gr Temperature – actual value
- wsrt Switch off the anti-theft alarm system (ADR – feedback signal for timer)
- br Power supply, minus – terminal 31
- blws Diagnosis
- grrt Temperature – setpoint
- brws Ground connection for external temperature sensor and temperature setpoint

b) Terminal 15 – necessary for connection TP4i
c) Lighting, terminal 58
d) Connection, diagnostic unit
e) Connection, external temperature sensor
g) Connection, external heating button
h) Connection, radio remote control TP4i
j) Connection, temperature sensor (outside temperature)
l) Connection, change-over switch “heat / ventilate” (option)
Initial operation: Activate changeover switch “heat / ventilate“ then switch on the heater.
z) Lighting, terminal 58

Cable colours circuit diagrams

sw = black
ws = white
wsrt = white / red
rt = red
ge = yellow
gn = green
vi = violet
br = brown
brws = brown / white
gr = grey
grrt = grey / red
bl = blue
blws = blue / white
li = purple

Please note!

- Insulate unused cable ends.
- Connectors and bush housings are shown from the cable inlet side.

AIRTRONIC L circuit diagram – 12 volt / 24 volt

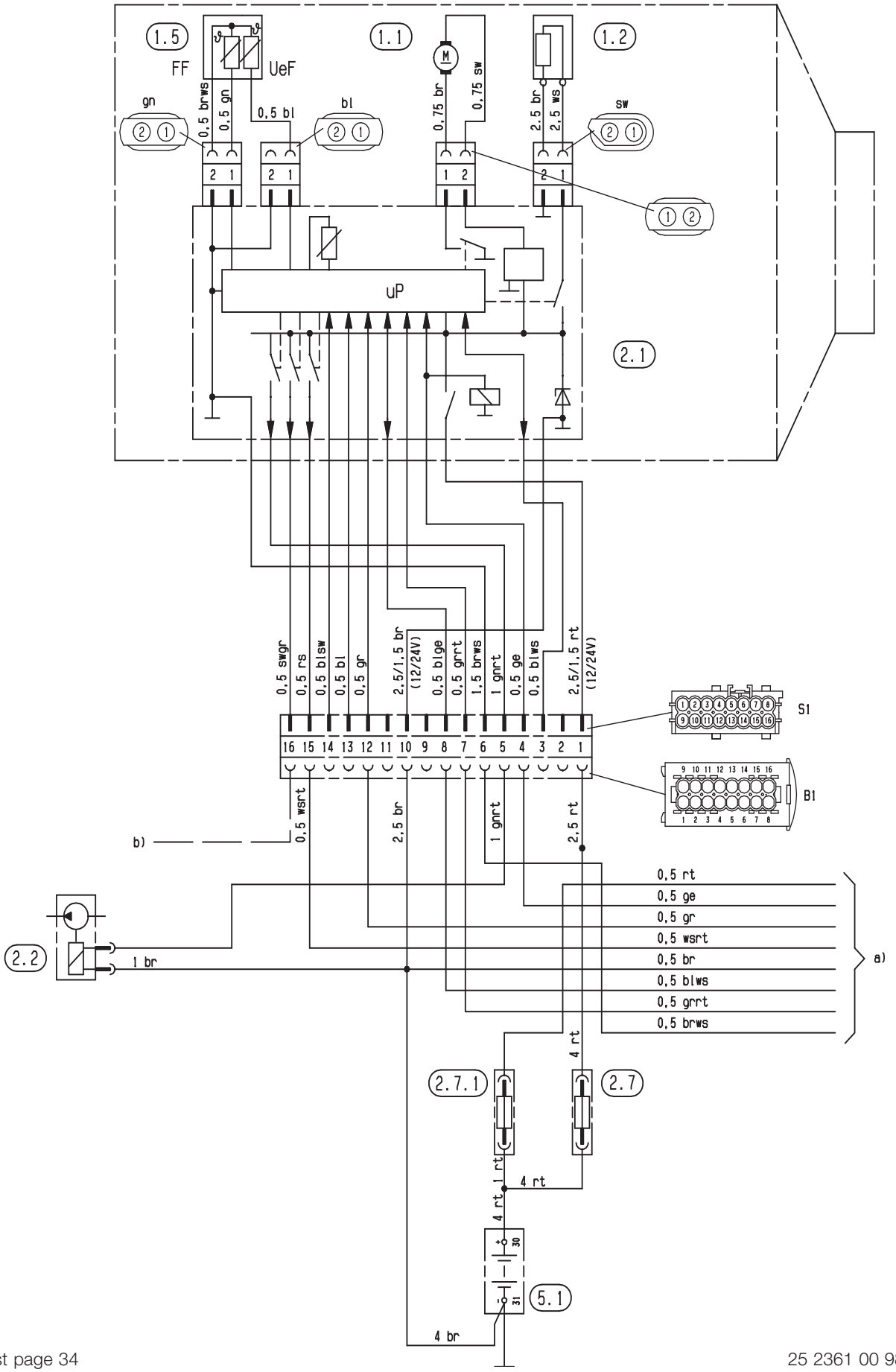

Parts list page 34

25 2361 00 98 01 A

6 Circuit diagram

Circuit diagram for control units

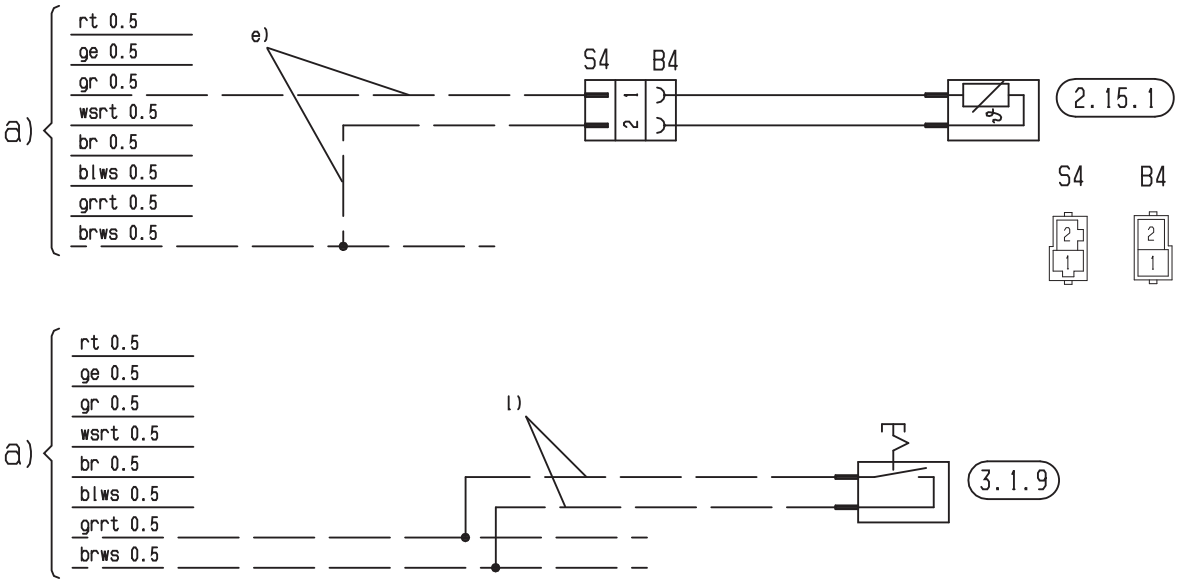

25 2069 00 97 01 C

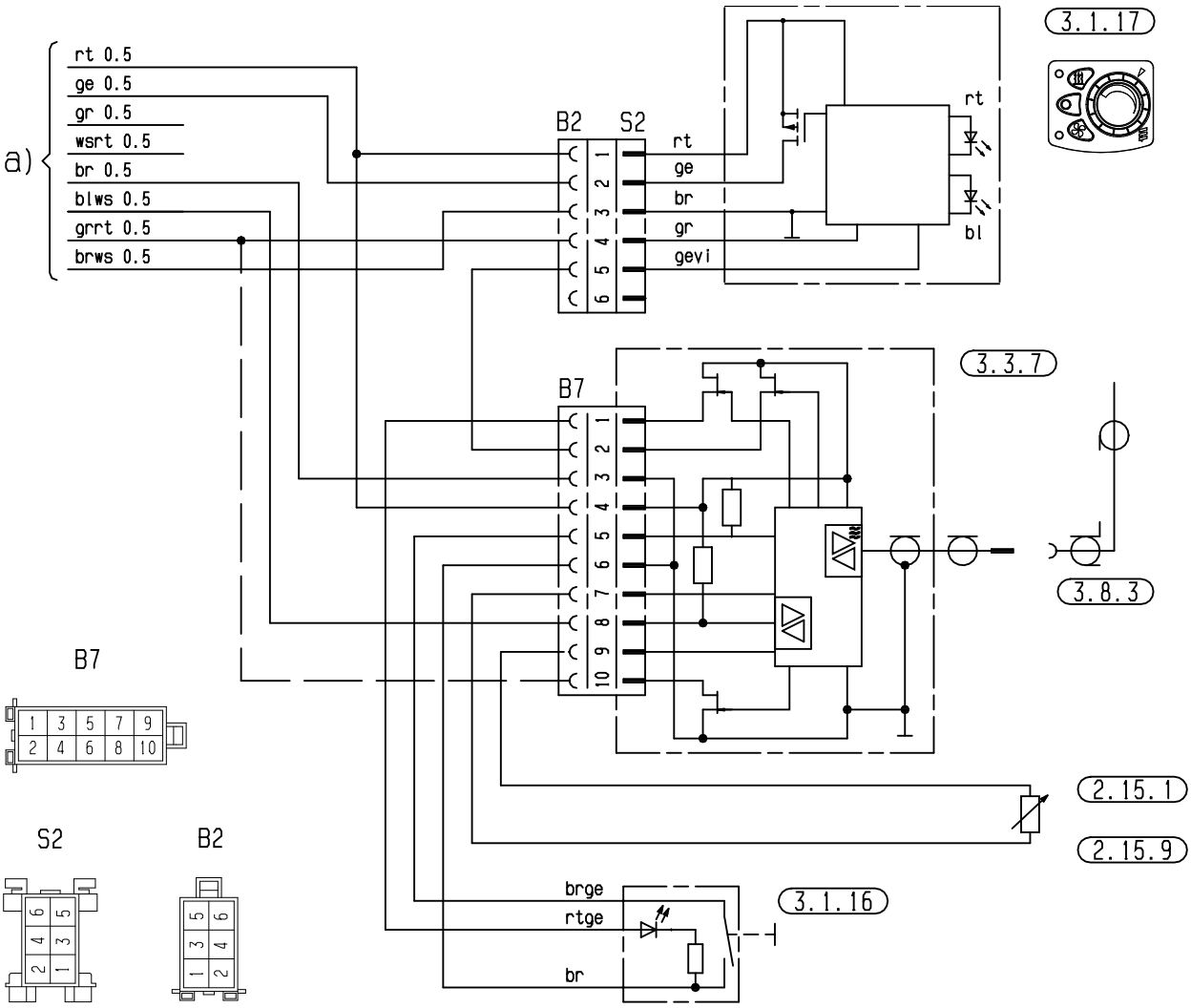

Parts list page 34

25 2069 00 97 03 B

6 Circuit diagram

Circuit diagram for control units

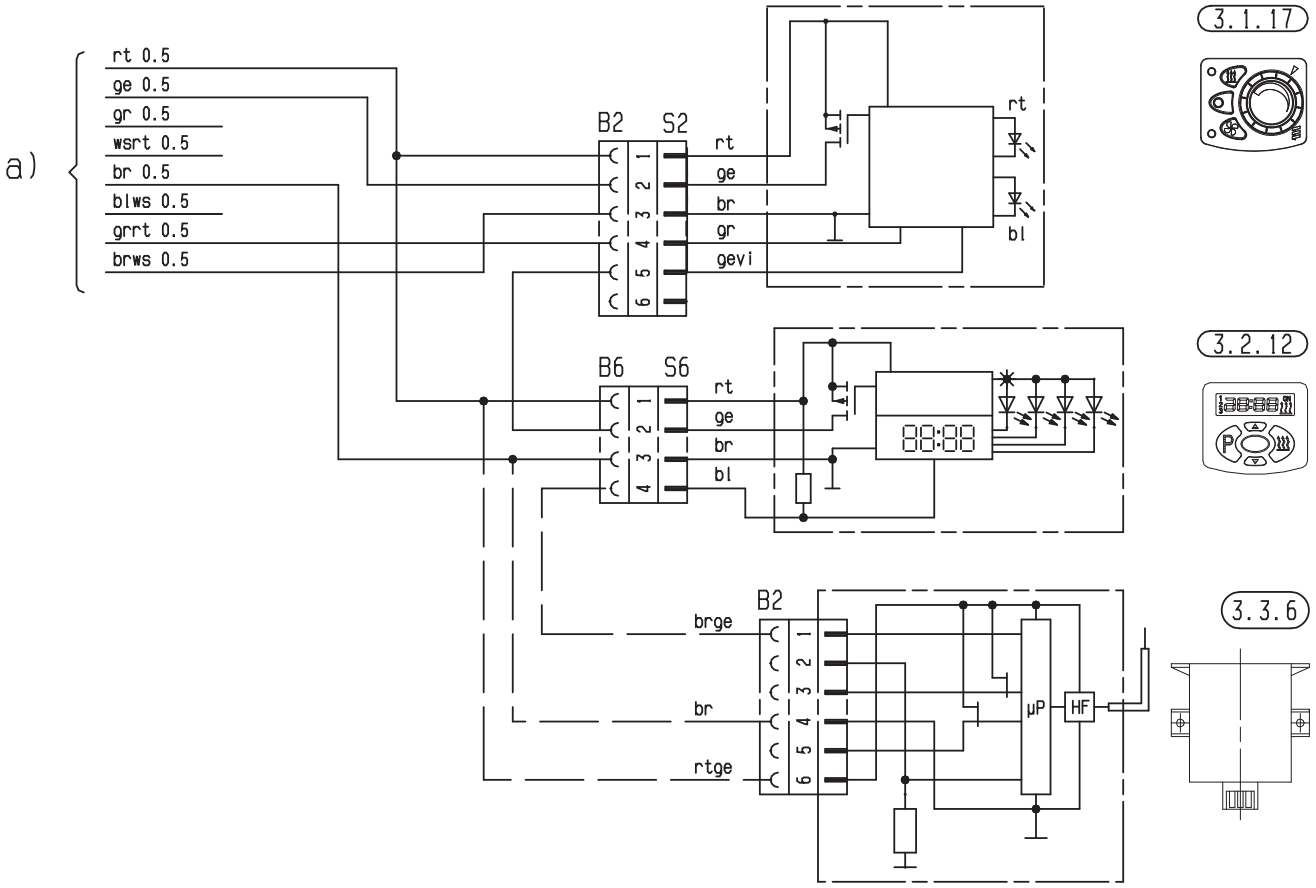

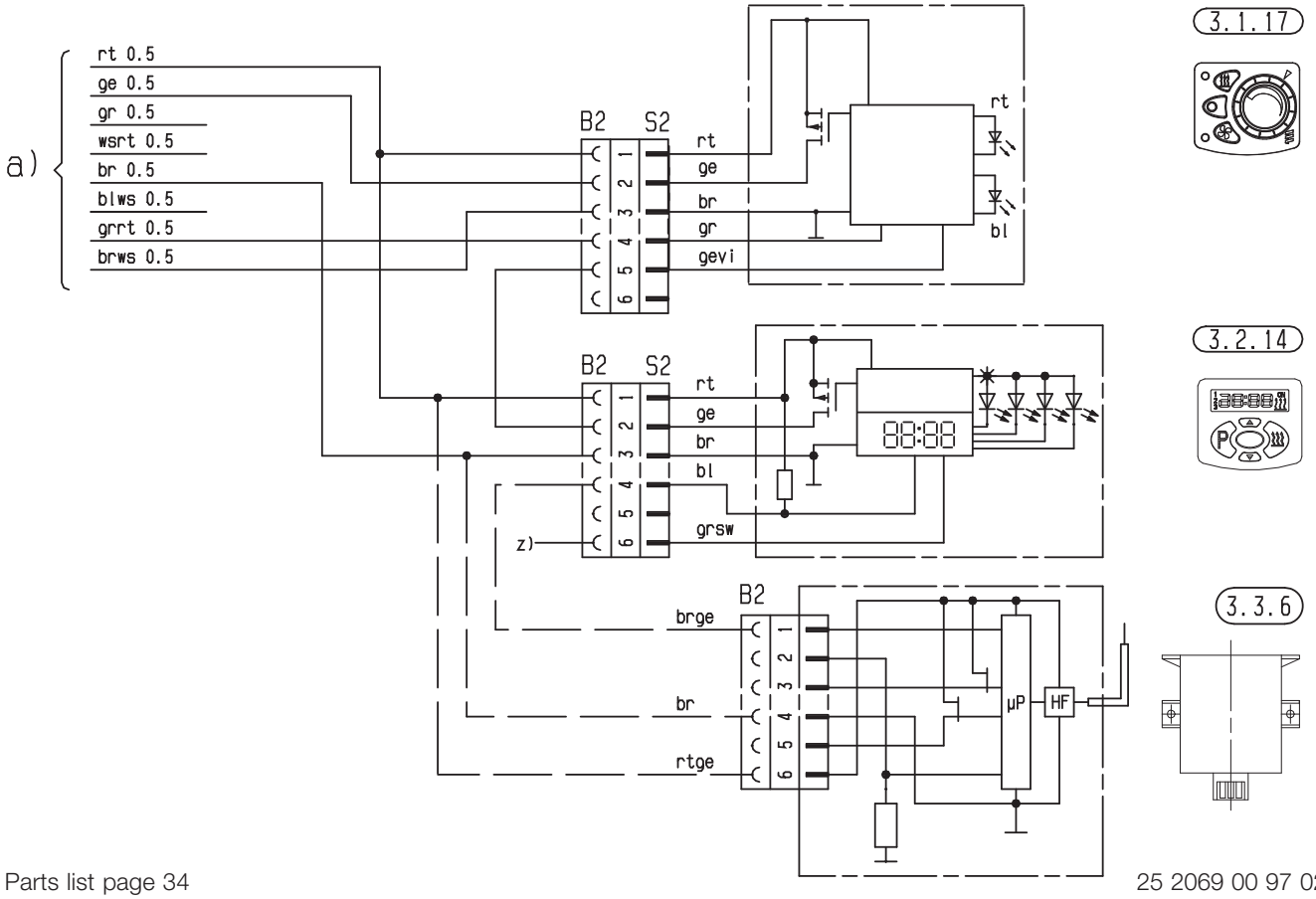

Parts list page 34

25 2069 00 97 02 A

6 Circuit diagram

Circuit diagram for control units

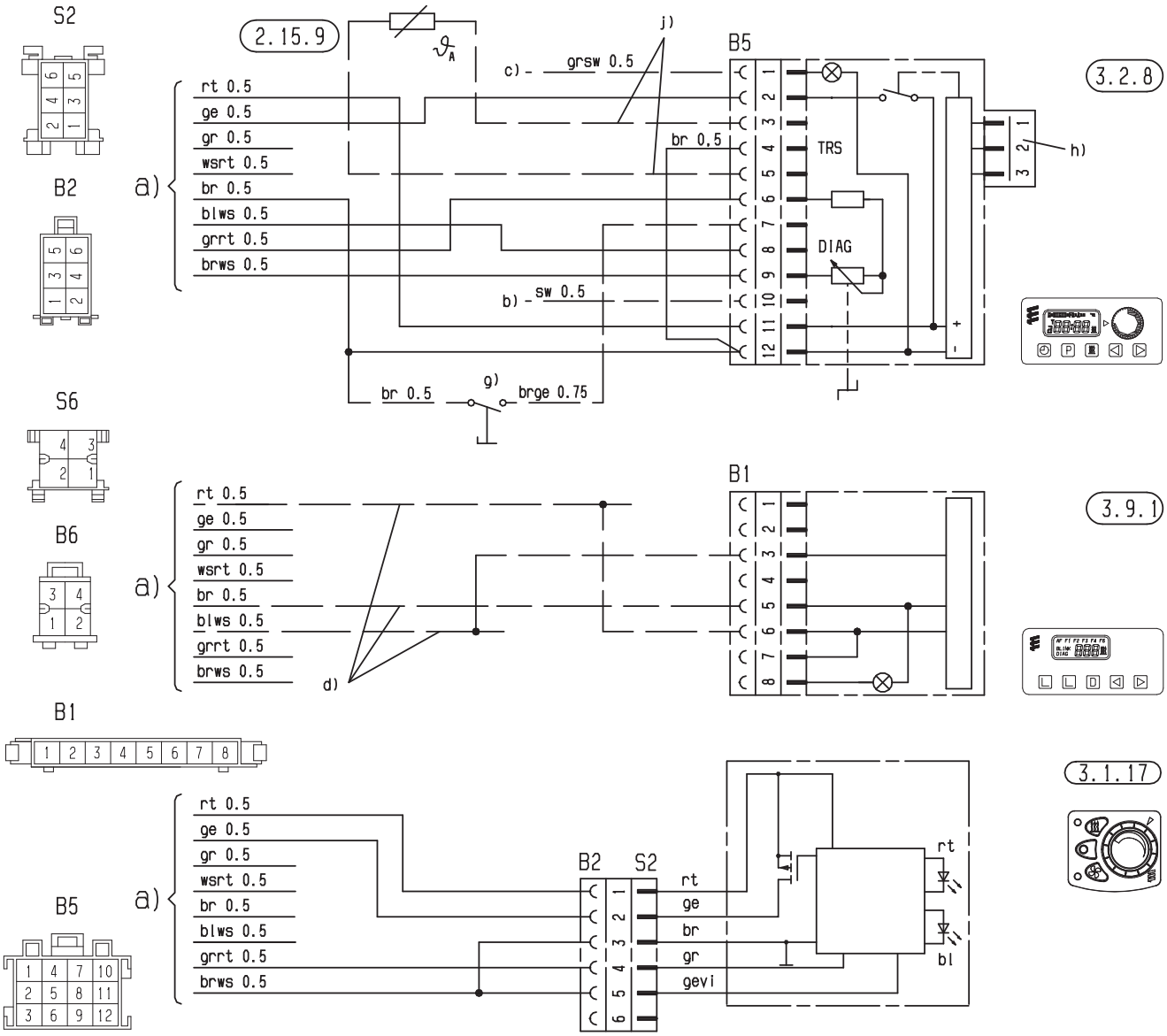

25 2069 00 97 02 A

Parts list page 34

6 Circuit diagram

Circuit diagram for control units

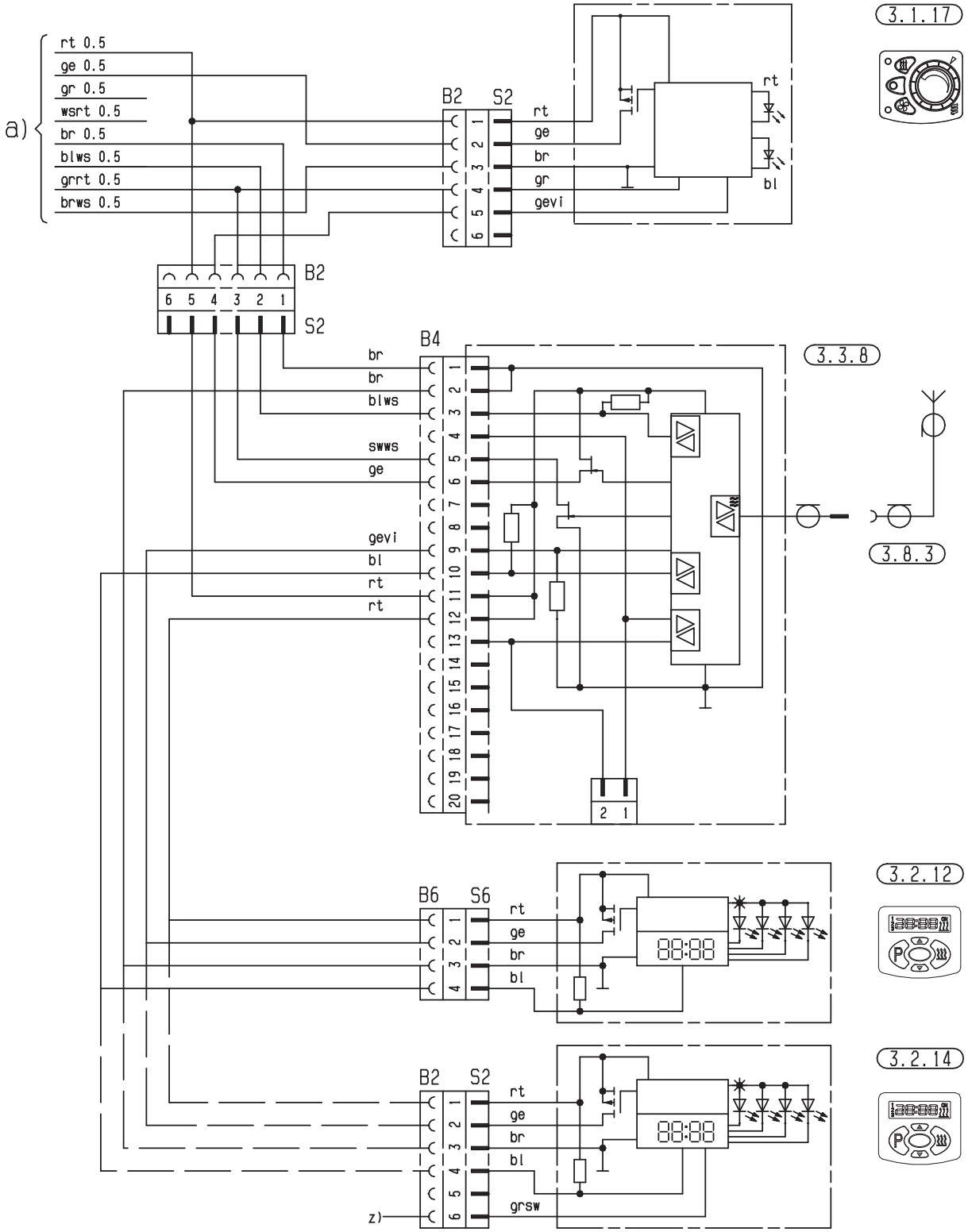

6 Circuit diagram

Circuit diagram for control units

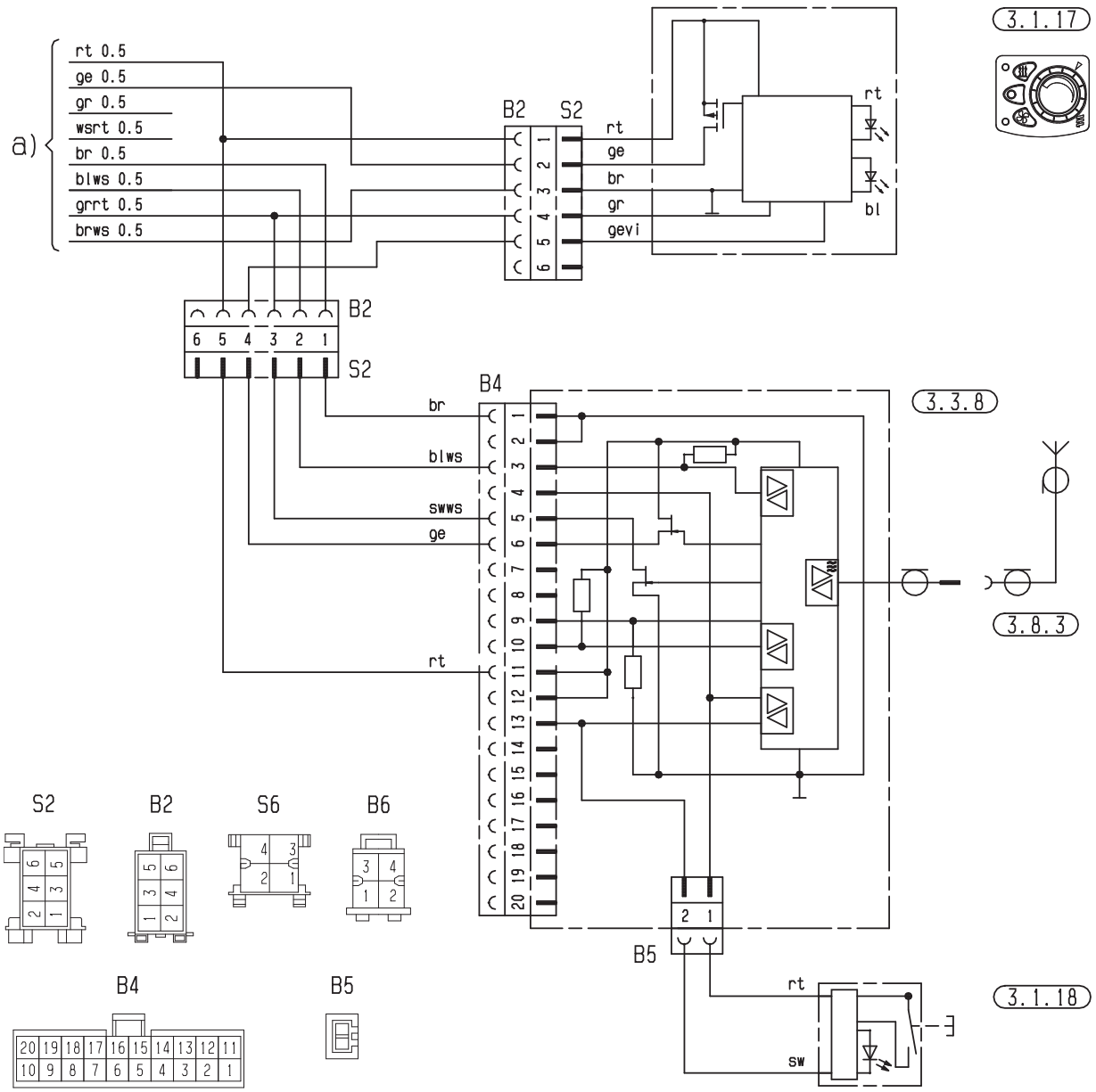

25 2069 00 97 04 A

Parts list page 34

Circuit diagram *AIRTRONIC* L – ADR – 12 volt / 24 volt

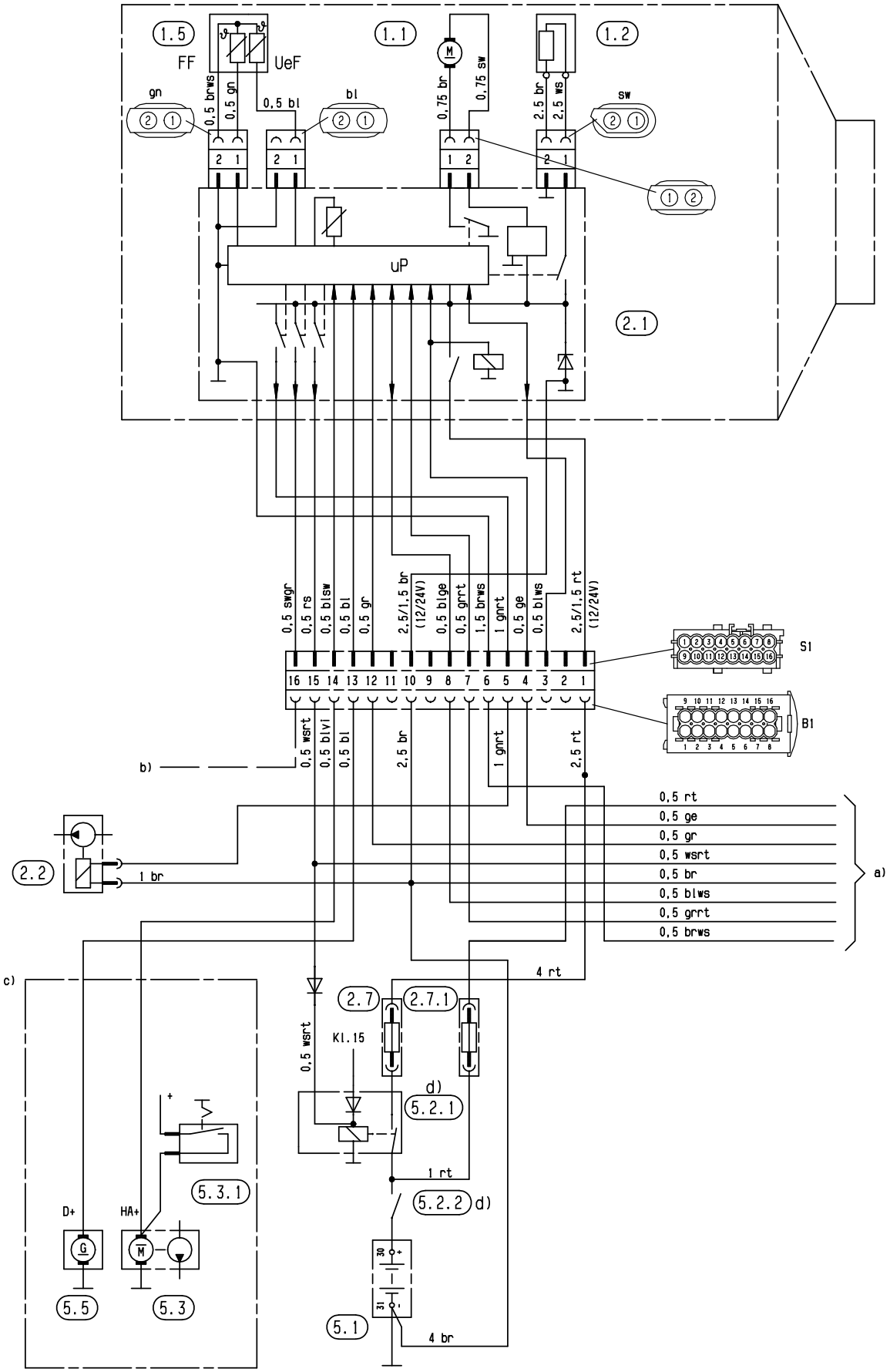

Parts list page 34

6 Circuit diagram

Circuit diagram control units – ADR

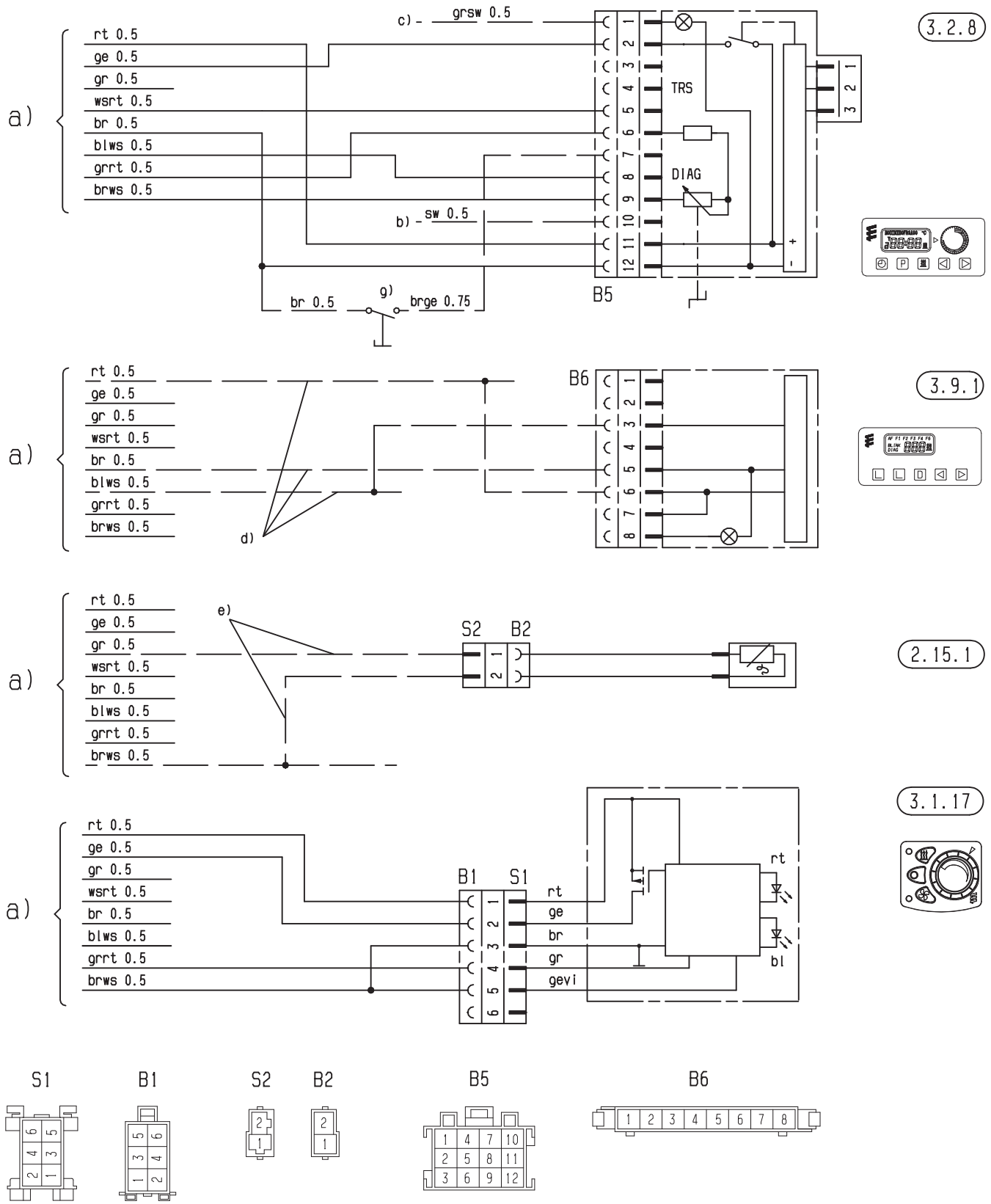

25 2069 00 96 01 B

Parts list page 34

Parts list circuit diagram control unit EasyStart R+ / R / T

2.15.1 Temperature sensor (room temperature) (included in scope of supply for EasyStart R+, optional for EasyStart R / T)
2.15.9 Outside temperature sensor (optional)

3.1.7 “OFF” button
3.1.9 “Heat / ventilate” switch
3.1.11 “Round” control unit
3.1.16 Radio remote control button
3.1.17 “Mini controller” control unit

3.2.15 **EasyStart T** timer

3.3.9 Radio remote control **EasyStart R** (stationary unit)
3.3.10 Radio remote control **EasyStart R+** (stationary unit)

3.6.1 Lead harness

3.8.3 Antenna

a) Connection of control units at the heater
c) Terminal 58 (lighting)
d) Parking ventilation with vehicle fan (optional)
e) Connection of **EasyStart T** timer timer
g) Connection “ON / OFF” key (optional e.g. Order No.: 22 1000 32 84 00)
h) Connection of “Ventilate” via **EasyStart R+**
x) ADR jumper
y) Connect and insulate cables

Please note!

- The timer / radio remote control must be connected in accordance with the circuit diagrams (page 36 – 49).
- Note heater type!
- The jumper labelled with y) in the circuit diagram must always be connected.
- Insulate unused cable ends.
- Connectors and bush housings are shown from the cable inlet side.

Cable colours circuit diagrams

sw = black
ws = white
rt = red
ge = yellow
gn = green
vi = violet
br = brown
gr = grey
bl = blue
li = purple

Assignment of the circuit diagrams to the different AIRTRONIC L and AIRTRONIC L heaters to ADR

The circuit diagrams are assigned according to the installed control box:
The circuit diagrams of the

- **EasyStart R+** 25 2361 00 97 01 C
- **EasyStart R** 25 2361 00 97 02 B
- **EasyStart T** 25 2361 00 97 03 A and 25 2361 00 97 04 A

apply to the heater

- with 2 diagnostic cables, which are connected to the 16-pin heater connector S1
  - OEM diagnostics cable bl/ws in chamber 3,
  - Universal version of diagnostics cable bl/ge in chamber 8.
- with a control box cable loom, which is wound with cable tape.

6 Circuit diagram

Pin assignments

EasyStart R+
Pin assignment at the stationary unit connector

1	Terminal 31 (negative)
2	– –
3	Ventilate (switching signal –)
4	DAT cable
5	Pushbutton / LED (negative)
6	Temperature sensor (negative)
7	Terminal 30 (positive)
8	S+ (switching on signal)
9	LED (positive)
10	Diagnosis cable (K line)
11	Pushbutton (negative)
12	Temperature sensor (positive)

EasyStart R
Pin assignment at the stationary unit connector

1	Terminal 31 (negative)
2	– –
3	– –
4	DAT cable
5	Pushbutton / LED (negative)
6	– –
7	Terminal 30 (positive)
8	S+ (switching on signal)
9	LED (positive)
10	Diagnosis cable (K line)
11	Pushbutton (negative)
12	– –

EasyStart T
Pin assignment at the EasyStart T-connector S1

1	Terminal 30 (positive)	rt
2	S+ (switching on signal)	ge
3	Terminal 31 (negative)	br
4	DAT cable	vi
5	Diagnosis cable (K line)	bl/ws
6	Terminal 58	gr/sw
7	Temperature sensor (positive)	gr
8	Temperature sensor (negative)	br/ws
9	– –	– –

Circuit diagram control units – EasyStart R+

Please note!

This circuit diagram is for heaters with 2 diagnostics cable and whose control box cable loom is wound with cable tape.

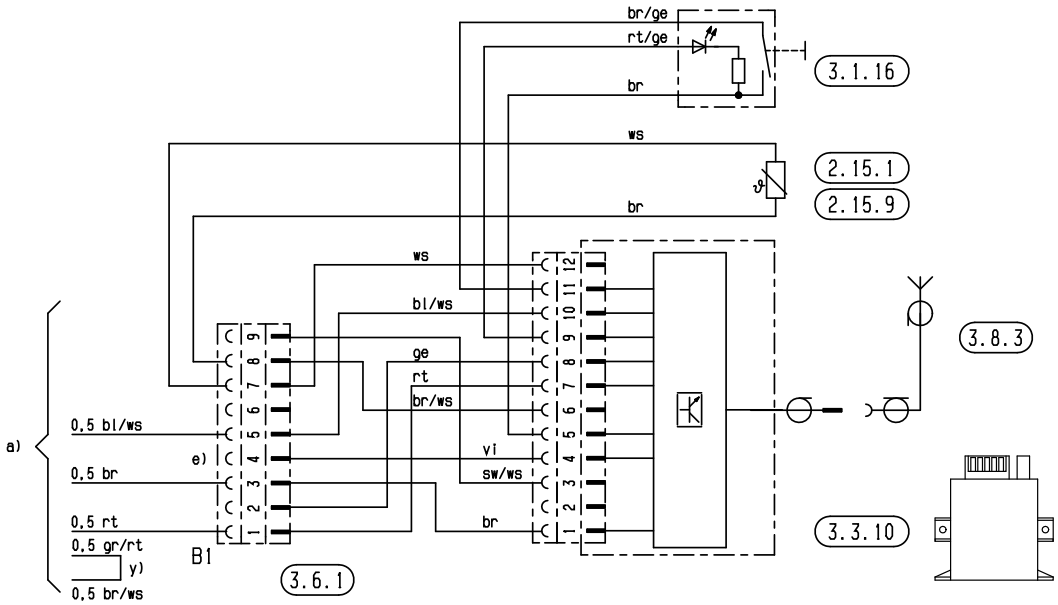

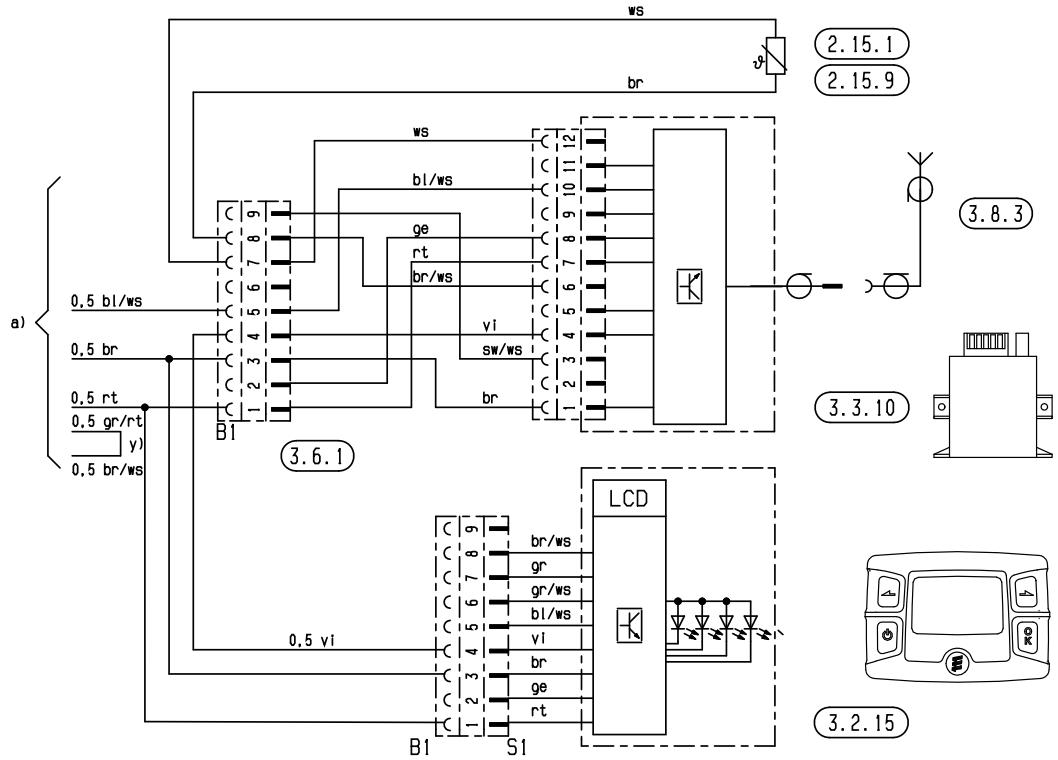

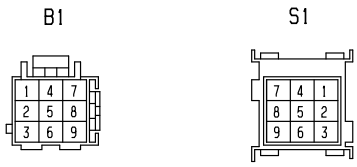

Parts list page 43

6 Circuit diagram

Circuit diagram control units – EasyStart R

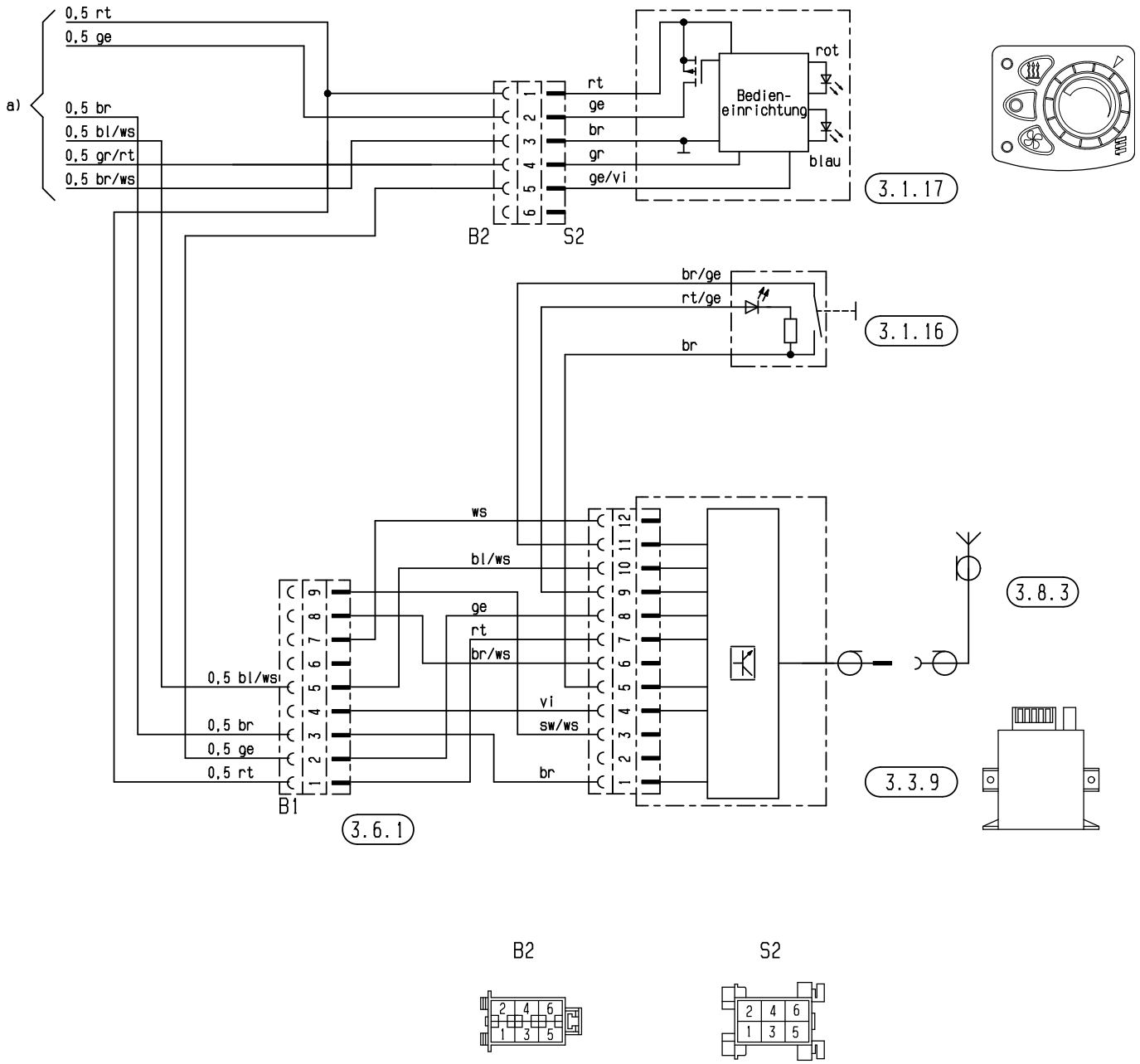

25 2361 00 97 05 B

Parts list page 43

Circuit diagram control units – EasyStart R

Please note!

This circuit diagram applies to control boxes with two diagnostic cables, see page 43.

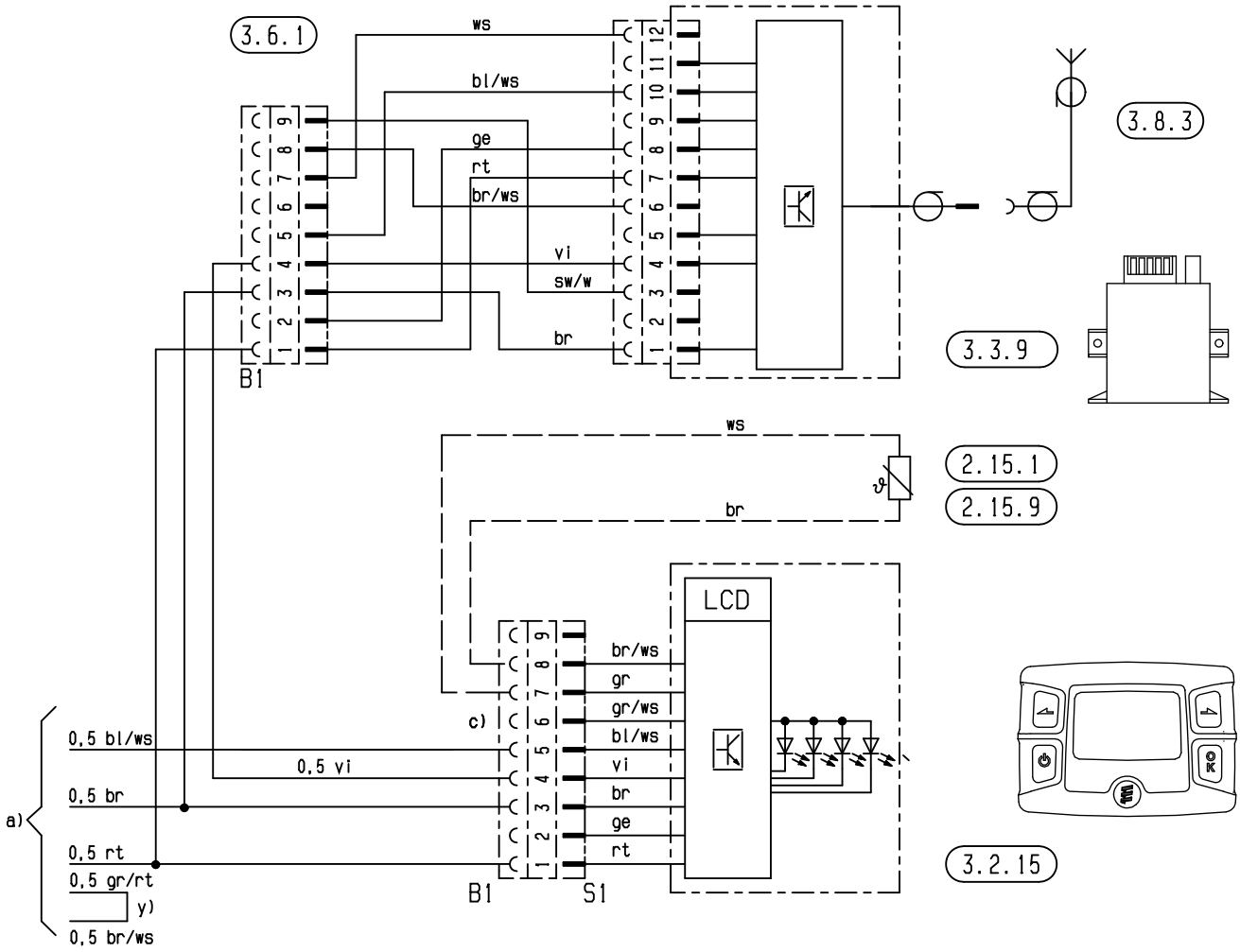

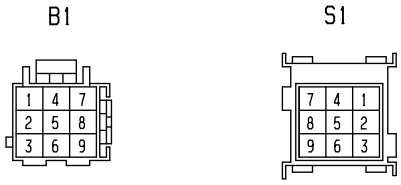

25 2361 00 97 02 B

Parts list page 43

6 Circuit diagram

Circuit diagram control units – EasyStart T

Please note!

This circuit diagram is for heaters with 2 diagnostics cable and whose control box cable loom is wound with cable tape.

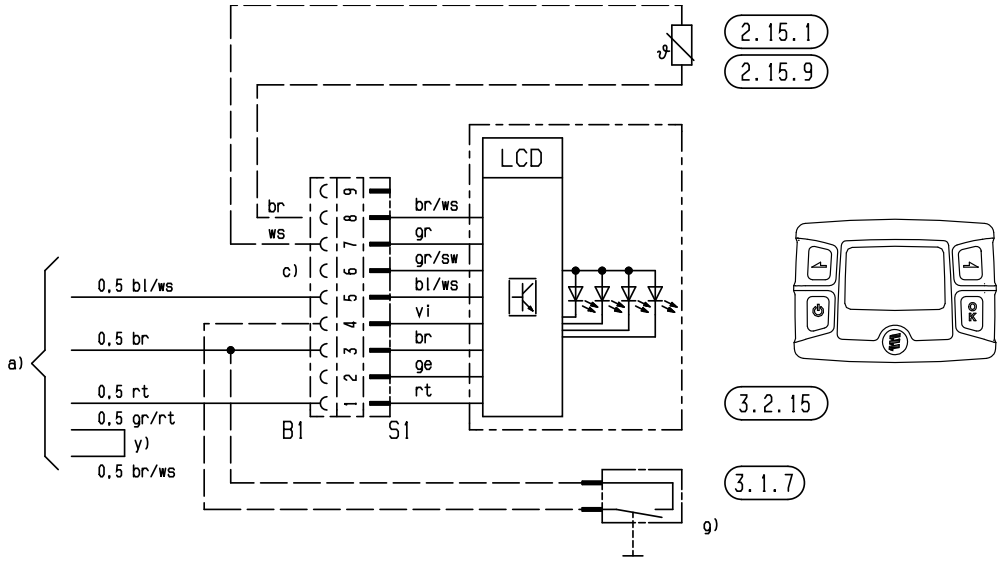

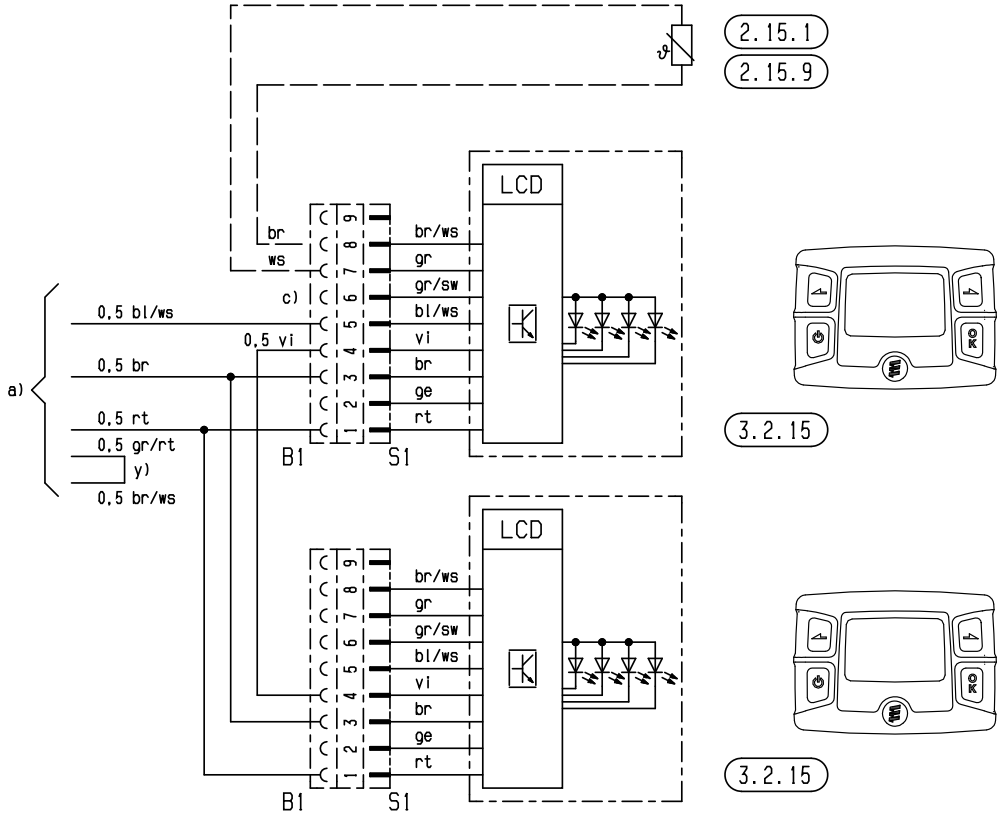

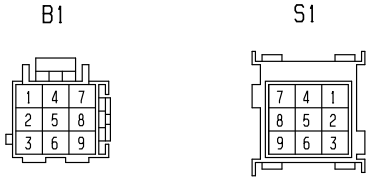

Parts list page 43

6 Circuit diagram

Circuit diagram control units – EasyStart T – ADR

Please note!

This circuit diagram is for heaters with 2 diagnostics cable and whose control box cable loom is wound with cable tape.

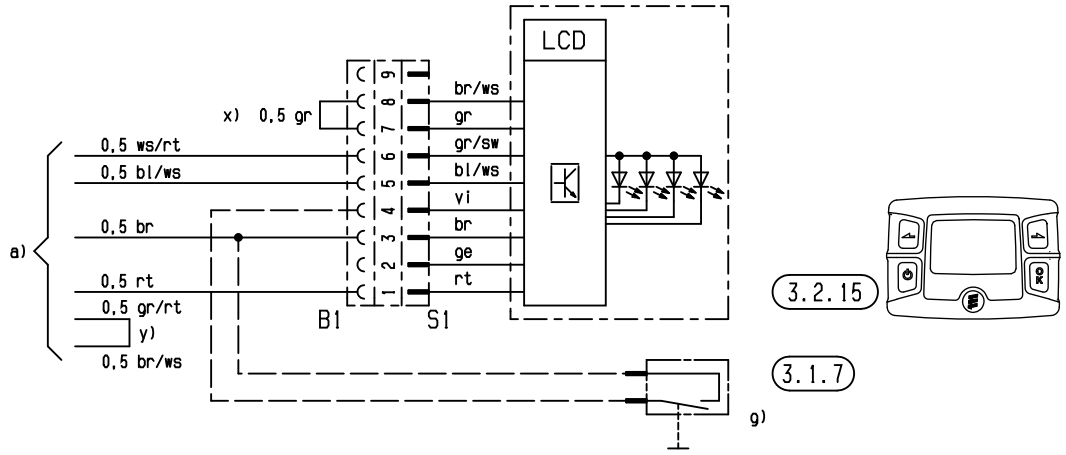

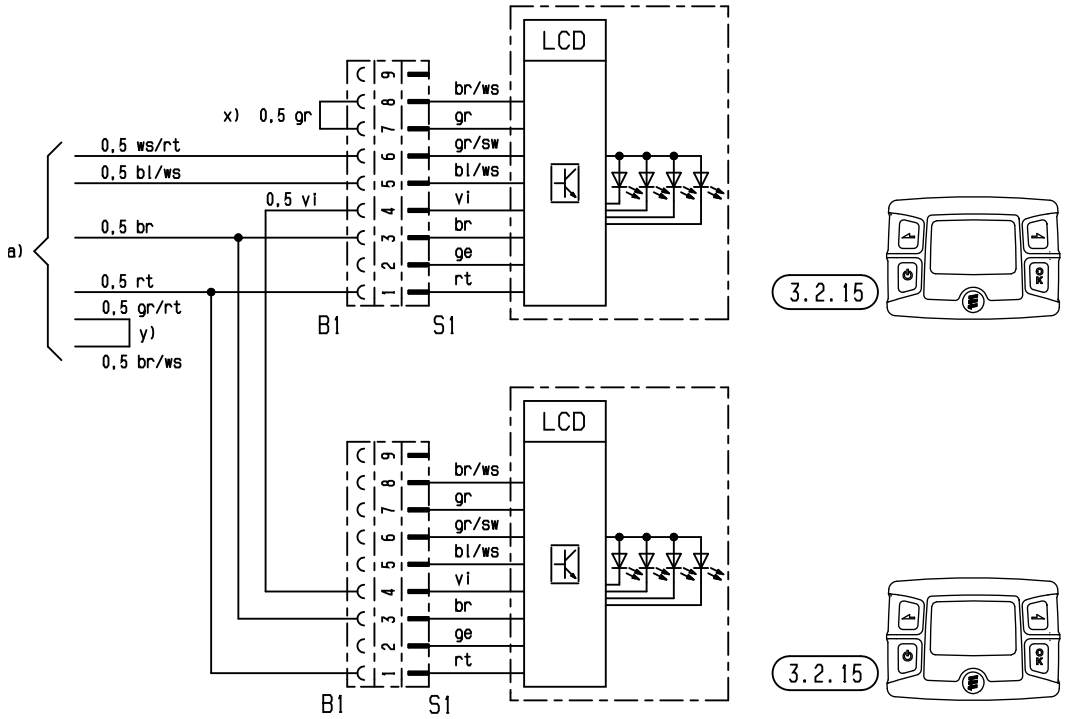

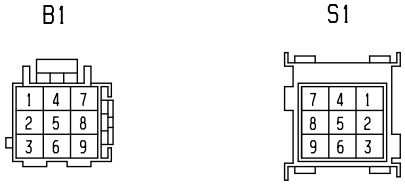

25 2361 00 97 04 A

Parts list page 43

7 Service

Certifications

The high quality of Eberspächer's products is the key to our success.
To guarantee this quality, we have organised all work processes in the company along the lines of quality management (QM). Even so, we still pursue a large number of activities for continuous improvement of product quality in order to keep pace with the similarly constantly growing requirements made by our customers.
All the steps necessary for quality assurance are stipulated in international standards.
This quality is to be considered in a total sense.
It affects products, procedures and customer / supplier relationships.
Officially approved public experts assess the system and the corresponding certification company awards a certificate.

Eberspächer has already qualified for the following standards:

Quality management in accordance with DIN EN ISO 9001:2000 and ISO/TS 16949:1999

Environmental management system in accordance with DIN EN ISO 14001:1996

Disposal

Disposal of materials
Old devices, defect components and packaging material can all be separated and sorted into pure-grade factions so that all parts can be disposed of as required in an environment-friendly manner recycled where applicable.
Electric motors, controllers and sensors (e.g. temperature sensors) are deemed to be „electronic scrap".

Dismantling the heater
The heater is dismantled according to the repair stages in the current troubleshooting / repair instructions.

Packaging
The packaging of the heater can be kept in case it has to be sent back.

EC Declaration of Conformity

With regard to the following products

Heater type *AIRTRONIC* L

we herewith confirm that it conforms with the prime safety requirements stipulated in the directives of the EU Council for harmonisation of the legal regulations of the member states with regard to electromagnetic compatibility (89 / 336 / EEC).
This declaration applies to all heaters manufactured according to the *AIRTRONIC* L production drawings, which are an integral part of this declaration.
The following standards / directives have been used to assess the product with regard to electromagnetic compatibility:

- EN 50081 – 1 Basic form interference emission
- EN 50082 – 1 Basic form of interference immunity
- 72 / 245 / EEC – Modification status 2005 / 83 / EC interference suppression in motor vehicles.

Representatives abroad

Argentina
AGCO Argentinia S. A.
Valentin Gomez 577
1706 Haedo
RA - Pcia. Buenos Aires
Tel. 0054 / 1 - 483 32 01
Fax. 0054 / 1 - 483 32 37

Champion S. A.
Av. Cordoba 2756 al 58
RA - 1187 Buenos Aires
Tel. 0054 / 1 - 962 16 21
Fax. 0054 / 1 - 962 16 27

for boat heaters
Trimer S. A.
P.O. Box 206
RA - 1425 Buenos Aires
Tel. 0054 / 11 47 77 45 77
Fax. 0054 / 11 47 77 45 88

Belgium and Luxembourg
Eberca bvba-sprl
Research Park Haasrode
Esperantolaan 2
B - 3001 Leuven Haasrode
Tel. 0032 / 16 - 40 25 00
Fax. 0032 / 16 - 40 05 15

Chile
für Bootsheizungen
Nauticentro Ltda.
Tomas Moro 135
Las Condes - Santiago
Tel. 0056 / 2 - 201 49 66
Fax. 0056 / 2 - 201 56 35

Denmark
Eberspächer Danmark
Literbuen 9
DK - 2740 Skovlunde
Tel. 00 45 / 44 - 85 30 30
Fax. 00 45 / 44 - 89 30 39

Estonia
Hesyco Group OÜ
Mäo 72751
Järvamaa
Tel. 00372 / 38 48 890/891
Fax. 00372 / 38 48 892

Finland
Wihuri Oy Autola
Manttaalitie 9
SF - 01510 Vantaa 51
Tel. 0035 / 89 - 82 58 51
Fax. 0035 / 89 - 82 58 52 07

France
Eberspächer S. A. S.
Z.A.C. la Clé Saint Pierre
3 rue Blaise Pascal
F - 78996 Elancourt Cedex
Tel. 0033 - 1 - 30 68 54 54
Fax. 0033 - 1 - 30 68 54 55

Greece
MARCONI HELLAS S. A.
Souliou 2 – 4
GR - 143 43 N. Halkidona - Athen
Tel. 00 30 / 210 - 25 13 500
Fax. 00 30 / 210 - 25 28 854

Great Britain
Eberspächer UK Ltd.
Headlands Business Park
Salisbury Road, Ringwood
GB - Hampshire BH 243 PB
Tel. 0044 / 1425 - 48 01 51
Fax. 0044 / 1425 - 48 01 52

Italy
Ofira Italiana SPA.
Via Eritrea 20 F
I - 25 126 Brescia
Tel. 0039 / 030 37931
Fax. 0039 / 030 45188

Iran
Overseas Techno Trading Co.
No. 4 GF, 17th Bucharest Ave.,
Argentina Sq.,
Tehran 15138
Tel. 0098 / 21 - 87 131 16/17
Fax. 0098 / 21 - 87 125 76

Japan
White House Co., Ltd.
412 Nakashua-Cho,
Tenpan-Hu
Nagoya 468 - 0096
Tel. 0081 / 52 835 56 11
Fax. 0081 / 52 835 56 12

Canada
Espar Products Inc.
6435 Kestrel Road
CDN - Mississauga
Ontario L5T / 1Z8
Tel. 001 / 905 - 670 09 60
Fax. 001 / 905 - 670 07 28

Latvia
Trans Baltic Trading Corporation
Maskavas iela 449
LV - 1063 Riga
Tel. 00371 / 2 - 266 323
Fax. 00371 / 7 - 187 967

Lithuania
Tradcon Ltd.
Paneriu 51
LIT - 2055 Vilnius
Tel. 00370 / 2 - 33 44 30
Fax. 00370 / 2 - 23 35 37

Republic Moldavia
TC - IUSTINIAN
140 Hinchesti Str., of.9
MD - 2070 Kishinev
Tel. +3732 / 727883, 738710
Fax. +3732 / 727883

Netherlands
Eberca B. V.
Marconistraat 2
NL - 3281 NB Numansdrop
Tel. 0031 / 1866 - 2 19 55
Fax. 0031 / 1866 - 2 18 18

Norway
Eberspächer Norge
Trollåsveien 34
N - 1414 Trollåsen
Tel. 00 47 / 66 - 82 30 50
Fax. 00 47 / 66 - 82 30 58

Austria
Eberspächer Ges.m.b.H.
Richard-Strauss-Str. 4
A - 1232 Wien
Tel. 0043 / 615 47 47 0
Fax. 0043 / 615 47 47 42

Poland
Eberspächer Sp.zo.o
Wysogotowo K. Poznania
ul. Okrezna 17
PL- 62081 Przezmierowo
Tel. 0048 / 61 - 816 18 50
Fax. 0048 / 61 - 816 18 60

Russia
Company OKMA
Kashirskoye shosse 13a
RUS - 115230 Moskau
Tel./Fax. 007 / 095 - 111 - 90 95

Representatives abroad

Sweden
Svenska Eberspächer AB
Box 2103
S - 12823 Skarpnäck
Tel. 0046 / 86 83 11 00
Fax. 0046 / 87 24 90 40

Switzerland
Technomag AG
Fischermättelistr. 6
Ch - 3000 Bern - 5
Tel. 0041 - 31 379 81 21
Fax. 0041 - 31 379 82 50

Slovak Republic
Molpir, spol.s.r.o.
Hrachova 30
SK-821 05 Bratislawa
Tel. 00 421 / 243 19 12 18
Fax. 00 421 / 243 19 12 20

Slovenia
Eberspaecher Gesellschaft m. b. H.
Podru•nica SLO
Celovška cesta 228
1000 Ljubljana
Tel. 00 386 / 1 518 70 52
Fax. 00 386 / 1 518 70 53

Spain – Portugal
Pedro Sanz Clima S.L
Avda. Ingeniero
Alfonso Peña Boeuf, 10
E - 28022 Madrid
Tel. 00349 / 1 - 748 07 85
Fax. 00349 / 1 - 329 42 31

Czech Republic
Eberspächer Praha s r.o.
AREAL ZÁLESÍ
Pod Višòovkou 29
CZ - 140 00 Praha 4 – Krè
Tel. 00 420 / 23 40 35 80 0
Fax. 00 420 / 23 40 35 82 0

Turkey
OSCA Otomotiv Ltd.
Org.Sanayi Sitesi Dolapdere Koop.
3 Ada No: 2
TR - Ikitelli / Istanbul
Tel. +90 212 - 549 86 31
Fax. +90 212 - 549 33 47

Hungary
Austropannon KFT
Fö ut 96
H - 9081 Györujbarat
Tel. 0036 / 96 - 54 33 33
Fax. 0036 / 96 - 45 64 81

Ukraine
Geruk K
ul. Vernigory 15
257008 Tscherkassy
Tel. 0038 / 04 72 63 87 47
Fax. 0038 / 04 72 63 87 47

USA
Espar Tech Center
9675 Harrison Road
Suite 102
Romulus, Michigan 48 174
Tel. 001 / 734 - 947 - 39 00
Fax. 001 / 734 - 947 - 72 98

Belarus
ZAO Belvneshinvest
Ul. Wostochnaja 129 / 102 - 104
BY. 220 113 Minsk
Tel. 00375 / 172 317 294
Fax. 00375 / 172 317 481

Index

Keyword	Page
A	
Accident prevention	4
Adapter cable	11, 12, 16
ADR	7, 34, 41 – 43, 49, 54
Assembly drawing	24
C	
Cancel the control box lock	13, 15, 16, 17
Certifications	41
Check temperature sensor	8
Circuit diagram	32 - 40
Combination sensor	27
Combustion air fan	29
Combustion chamber cover	30
Control and safety devices	7
Control box	26
Customer service program EDiTH	7, 11, 15, 16
Customer service program KD2000	7
Cutaway view	5
D	
Diagnostic unit	11, 12
Disposal	41
E	
EasyStart R	43, 44, 46, 47
EasyStart R+	11, 19, 45 – 45
EasyStart T	11, 43, 44, 48, 49
Emergency stop	7
Exhaust emission specification	9
Explosion drawing	24
F	
Fan speed	19
Fault code	18 - 22
Fault description	18 - 22
Fault diagnosis	11
Faults	9
Flame sensor	27
Fuel metering pump	31
Fuel supply	31
Function	5 - 7
Functional description	6
G	
Glow plug	26
Guarantee	4
H	
Heating mode	6

Keyword	Page
I	
Initial commissioning	4
Introduction	4
ISO adapter	11, 15
L	
Liability claim	4
List of abbreviations	45
List of Contents	2, 3
M	
Metering pump	31
Module timer	11, 14
O	
Overheating sensor	27
P	
Parts list	25
Pin assignments	44
Picture symbols	4
Q	
Quality management	41
R	
Regulations	4
Repair instructions	23 - 31
Representatives abroad	42, 43
Representatives	42, 43
Resistance values	9
S	
Safety devices	7
Safety information	4
Service	41 - 43
Statutory regulations	4
Switching value overheating sensor	9
T	
Technical data	8
Testing equipment	11
Test speed for the blower	9
Troubleshooting	9 - 22
V	
Ventilating mode	6

8 Index

List of abbreviations

ADR
European agreement about the international transport of dangerous goods on the road.

EC type-approval
Permit awarded by the Federal Vehicle Office for the production of a heater for installation in motorised vehicles.

EMC Directive
Electromagnetic compatibility.

JE-partner
J. Eberspächer partner.